US006535201B1

(12) **United States Patent**
Cooper et al.

(10) **Patent No.: US 6,535,201 B1**
(45) **Date of Patent: Mar. 18, 2003**

(54) **METHOD AND SYSTEM FOR THREE-DIMENSIONAL TOPOGRAPHICAL MODELING**

(75) Inventors: **Michael Cooper**, Austin, TX (US); **Michael Paolini**, Round Rock, TX (US)

(73) Assignee: **International Business Machines Corporation**, Armonk, NY (US)

(*) Notice: Subject to any disclaimer, the term of this patent is extended or adjusted under 35 U.S.C. 154(b) by 0 days.

(21) Appl. No.: **09/466,436**

(22) Filed: **Dec. 17, 1999**

(51) **Int. Cl.**[7] **G09G 5/00**
(52) **U.S. Cl.** **345/173**; 434/114; 340/407.1
(58) **Field of Search** 345/173, 179; 178/18.01–18.07; 341/27; 340/407.1; 434/113, 114

(56) **References Cited**

U.S. PATENT DOCUMENTS

5,717,423 A * 2/1998 Parker 345/108
5,736,978 A * 4/1998 Hasser et al. 345/156
5,977,867 A * 11/1999 Blouin 178/18.01
5,988,902 A * 11/1999 Holehan 341/22
6,340,957 B1 * 1/2002 Adler et al. 345/1.3

* cited by examiner

Primary Examiner—Bipin Shalwala
Assistant Examiner—Ricardo Osorio
(74) *Attorney, Agent, or Firm*—Marilyn Smith Dawkins; Bracewell & Patterson, L.L.P.

(57) **ABSTRACT**

A method and system for three-dimensional topographical modeling. A control surface that is adjustable provides a tactile-detectable graphical representation of a three-dimensional graphical image and associated physical characteristics. A sensitivity element detects an external force applied to the control surface. A controller adjusts the tactile-detectable graphical representation to model the associated physical characteristics of the three-dimensional graphical image when external force is applied to the control surface.
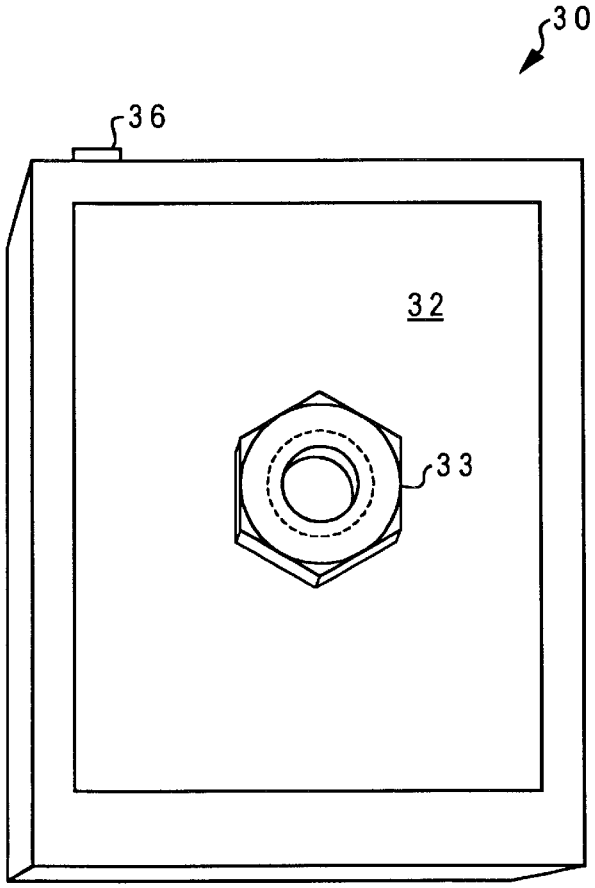
36 Claims, 7 Drawing Sheets