United States Patent [19]

Bachman et al.

[11] **4,025,901**

[45] **May 24, 1977**

[54] **DATABASE INSTRUCTION FIND OWNER**

[75] Inventors: **Charles W. Bachman**, Lexington; **Benjamin S. Franklin**, Cambridge, both of Mass.

[73] Assignee: **Honeywell Information Systems, Inc.**, Waltham, Mass.

[22] Filed: **June 19, 1975**

[21] Appl. No.: **588,434**

[52] **U.S. Cl.** **340/172.5**; 444/1

[51] **Int. Cl.**[2] **G06F 9/20**; G06F 9/16; G06F 13/00

[58] **Field of Search** 340/172.5; 445/1; 444/1

[56] **References Cited**

UNITED STATES PATENTS

3,389,380	6/1968	Ashbaugh et al.	340/172.5
3,401,376	9/1968	Barnes et al.	340/172.5
3,533,075	10/1970	Johnson et al.	340/172.5
3,614,746	10/1971	Klinkhamer	340/172.5
3,656,123	4/1972	Carnevale et al.	340/172.5
3,693,165	9/1972	Reiley et al.	340/172.5
3,787,813	1/1974	Cole et al.	340/172.5
3,821,708	8/1975	Casey et al.	340/172.5
3,878,513	4/1975	Werner	340/172.5
3,889,243	6/1975	Drimak	340/172.5
3,891,974	6/1975	Coulter et al.	340/172.5
3,909,798	9/1975	Wallach et al.	340/172.5
3,916,385	10/1975	Parmar et al.	340/172.5
3,916,387	10/1975	Woodrum	340/172.5
3,938,096	2/1976	Brown et al.	340/172.5
3,950,730	4/1976	Bienvenu et al.	340/172.5

Primary Examiner—Gareth D. Shaw
Assistant Examiner—Jan E. Rhoads
Attorney, Agent, or Firm—Nicholas Prasinos; Ronald T. Reiling

[57] **ABSTRACT**

One of a series of hardware/firmware primitives is disclosed for converting a general purpose digital computer into a database machine. The invention comprises a hardware/firmware implemented machine instruction called the find owner instruction, which fetches a set descriptor, which along with a base register BR, allows access to the owner pointer of a member record. The address of the owner record is then loaded into a register or registers.
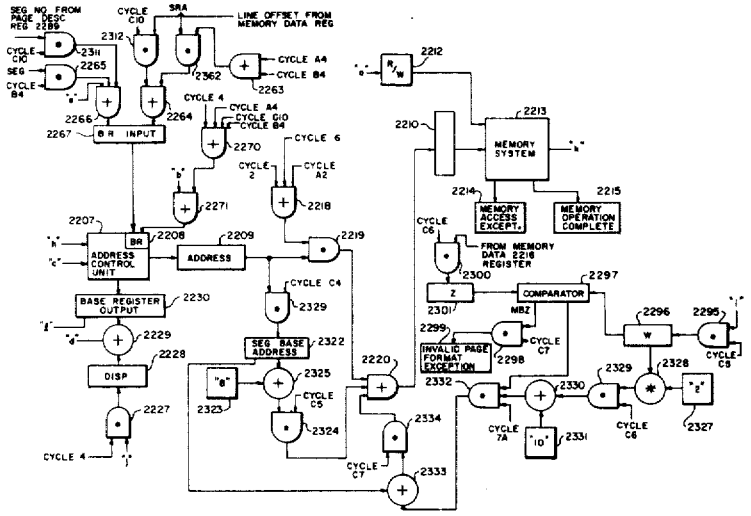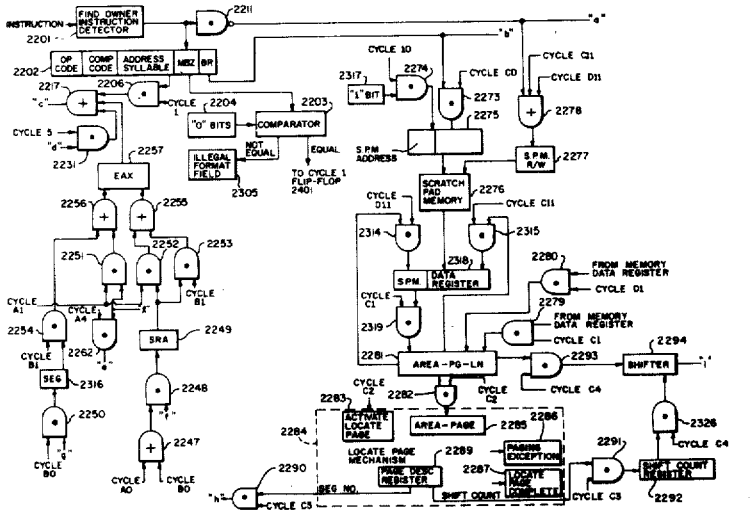
10 Claims, 82 Drawing Figures