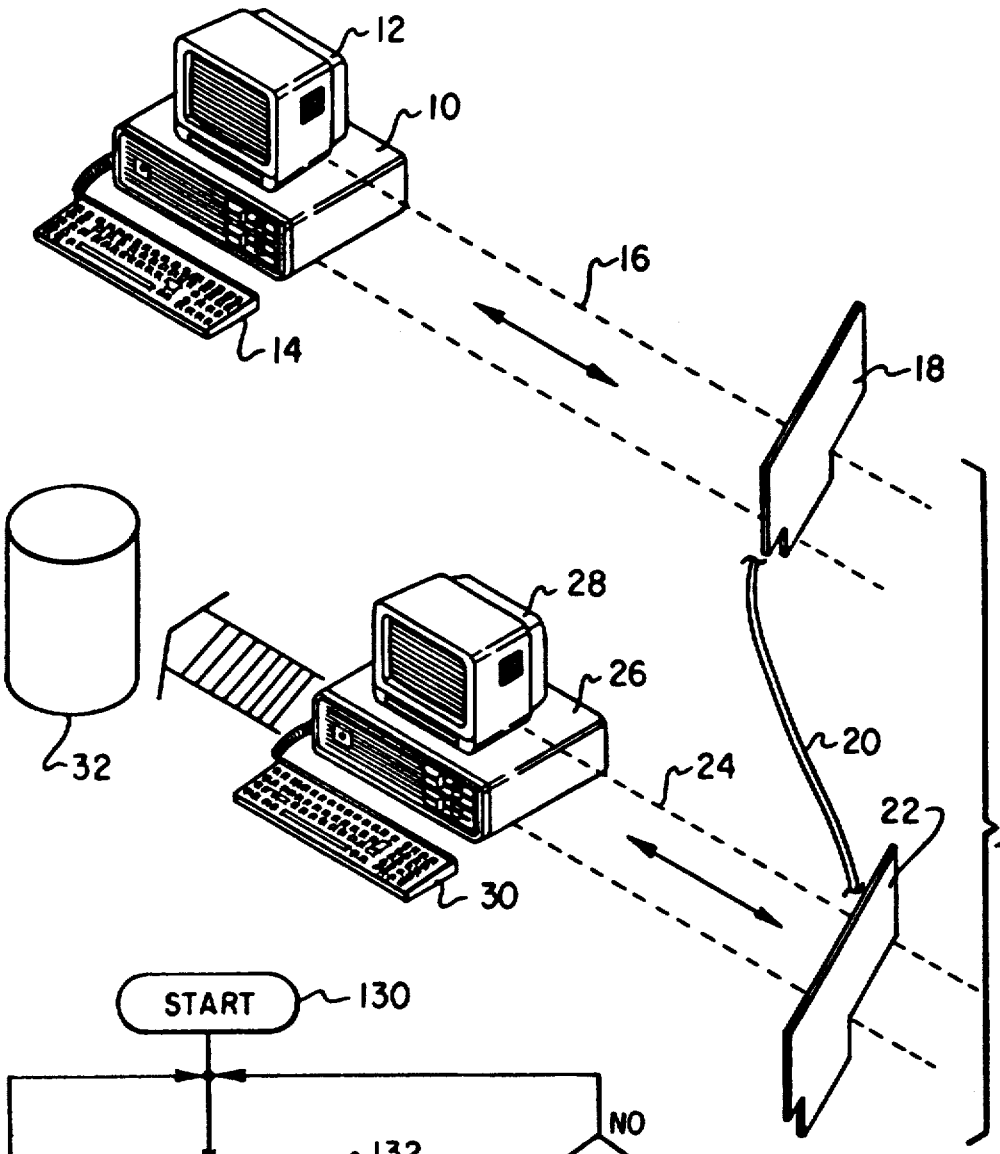
12
10
16
14
18
28
26
20
24
22
32
30

Fig. 1

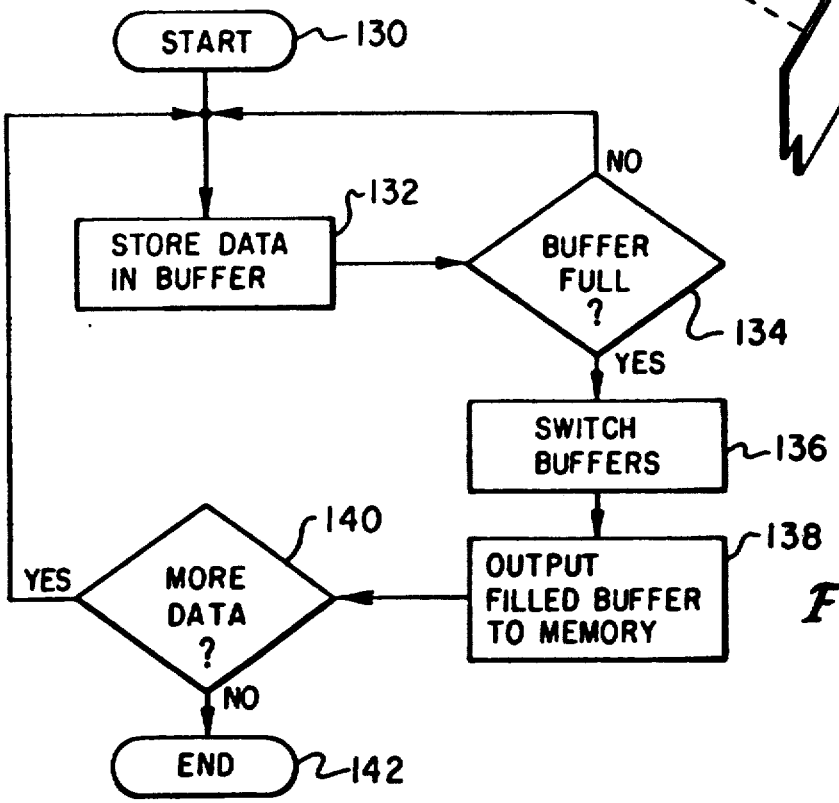
START
130
NO
132
STORE DATA IN BUFFER
BUFFER FULL ?
134
YES
SWITCH BUFFERS
136
140
138
YES
MORE DATA ?
OUTPUT FILLED BUFFER TO MEMORY
NO
END
142

Fig. 5