April 26, 1938. S. VERNET 2,115,501

THERMOSTAT

Filed Oct. 1, 1934 2 Sheets-Sheet 1

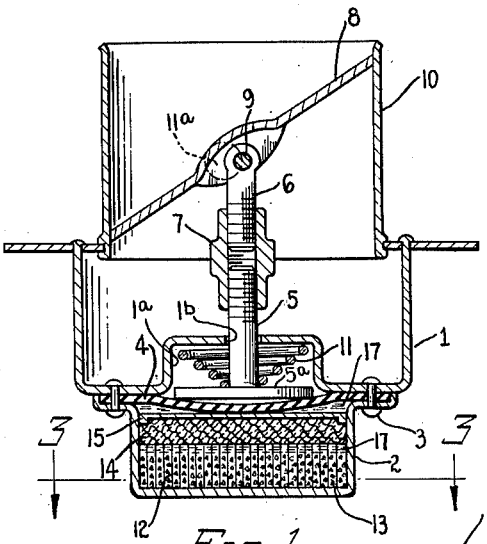

FIG.-1

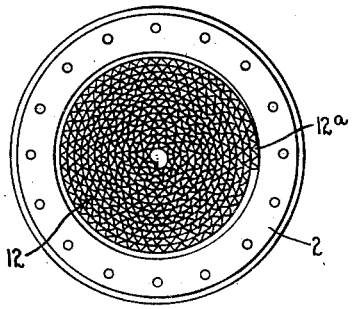

FIG.-2

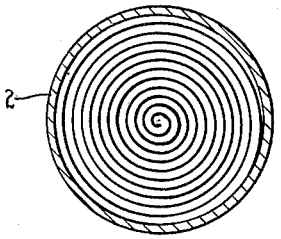

FIG.-3

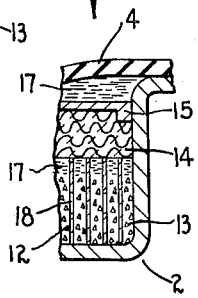

FIG.-4

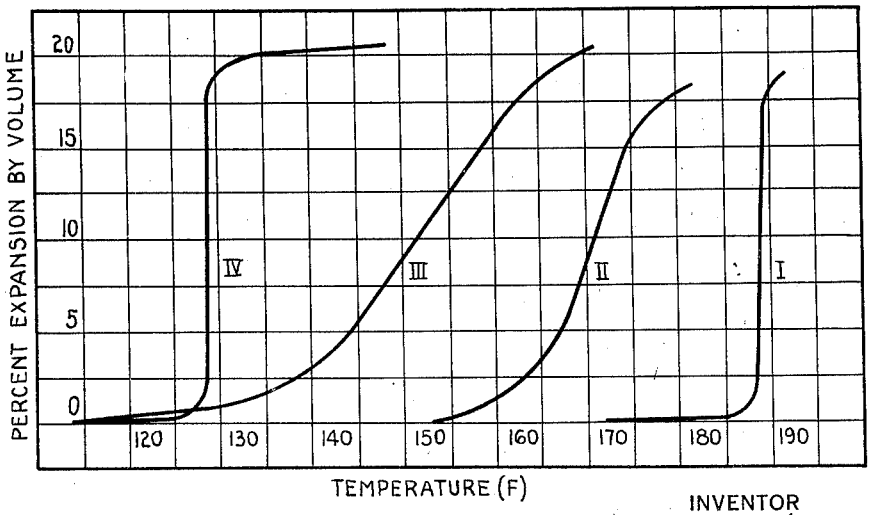

FIG.-5

INVENTOR
Sergius Vernet
BY
Andrew K. Foulds
his ATTORNEY