July 5, 1955 J. F. HALE ET AL 2,712,501

TREATMENT OF COFFEE

Filed April 9, 1954

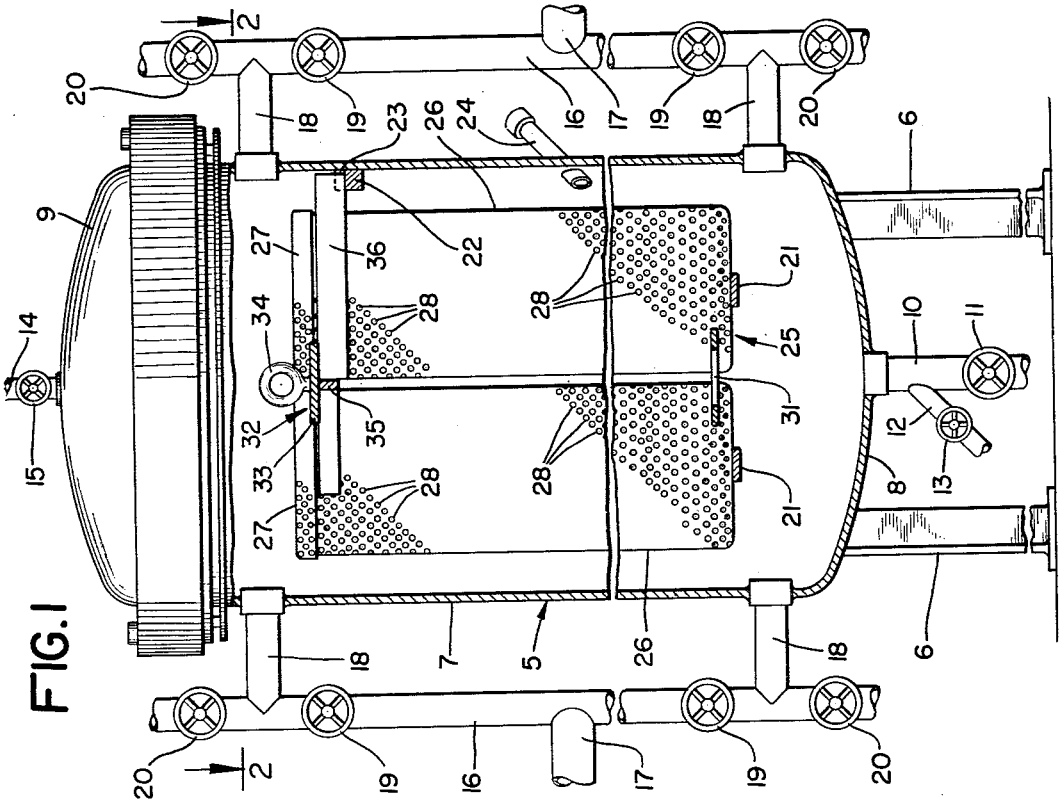

FIG. 1

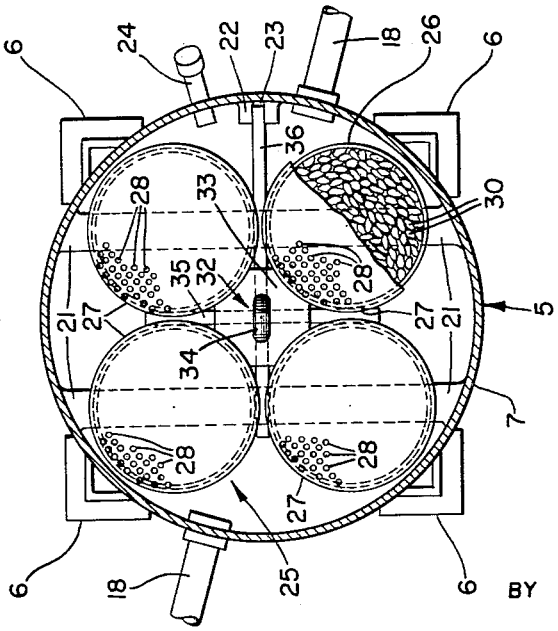

FIG. 2

INVENTORS.
JAMES F. HALE
ROBERT B. NOTTINGHAM
EDWARD W. PITZ, JR.

BY W. P. Churchill

ATTORNEY.