US009510901B2

(12) **United States Patent**
Steinke et al.

(10) **Patent No.: US 9,510,901 B2**
(45) **Date of Patent: Dec. 6, 2016**

(54) **SELECTABLE ECCENTRIC REMODELING AND/OR ABLATION**

(71) Applicant: **Vessix Vascular, Inc.**, Laguna Hills, CA (US)

(72) Inventors: **Tom A. Steinke**, San Diego, CA (US); **Corbett W. Stone**, San Diego, CA (US); **Stephen O. Ross**, Fallbrook, CA (US); **Brian S. Kelleher**, Ramona, CA (US); **Raphael M. Michel**, San Diego, CA (US); **Donald H. Koenig**, San Diego, CA (US)

(73) Assignee: **Vessix Vascular, Inc.**, Laguna Hills, CA (US)

(*) Notice: Subject to any disclaimer, the term of this patent is extended or adjusted under 35 U.S.C. 154(b) by 468 days.

(21) Appl. No.: **13/671,474**

(22) Filed: **Nov. 7, 2012**

(65) **Prior Publication Data**

US 2013/0066316 A1 Mar. 14, 2013

Related U.S. Application Data

(60) Continuation of application No. 13/403,920, filed on Feb. 23, 2012, which is a continuation of application
(Continued)

(51) **Int. Cl.**

A61B 18/14	(2006.01)
A61B 18/18	(2006.01)
A61B 18/00	(2006.01)

(52) **U.S. Cl.**
CPC ***A61B 18/1492*** (2013.01); ***A61B 18/18*** (2013.01); ***A61B 18/1815*** (2013.01);
(Continued)

(58) **Field of Classification Search**
CPC A61B 18/1492; A61B 18/1435; A61B 2018/00214; A61B 2018/1435; A61B 2018/1497; A61B 2018/1467; A61B 2018/0016
See application file for complete search history.

(56) **References Cited**

U.S. PATENT DOCUMENTS

164,184	A	6/1875	Kiddee
1,167,014	A	1/1916	O'Brien

(Continued)

FOREIGN PATENT DOCUMENTS

CA	2384866	A1	4/2001
DE	10038737	A1	2/2002

(Continued)

OTHER PUBLICATIONS

CardioVascular Technologies Inc., "Heated Balloon Device Technology," 11 pages, 2008.

(Continued)

Primary Examiner — Michael Peffley

(57) **ABSTRACT**

A catheter and catheter system for eccentric remodeling and/or removal of atherosclerotic material of a blood vessel of a patient include an elongate flexible catheter body with a radially expandable structure. A plurality of electrodes or other electrosurgical energy delivery surfaces can radially engage atherosclerotic material when the structure expands. An atherosclerotic material detector near the distal end of the catheter body may measure circumferential atherosclerotic material distribution, and a power source selectively energizes the electrodes to eccentrically remodel the measured atherosclerotic material.
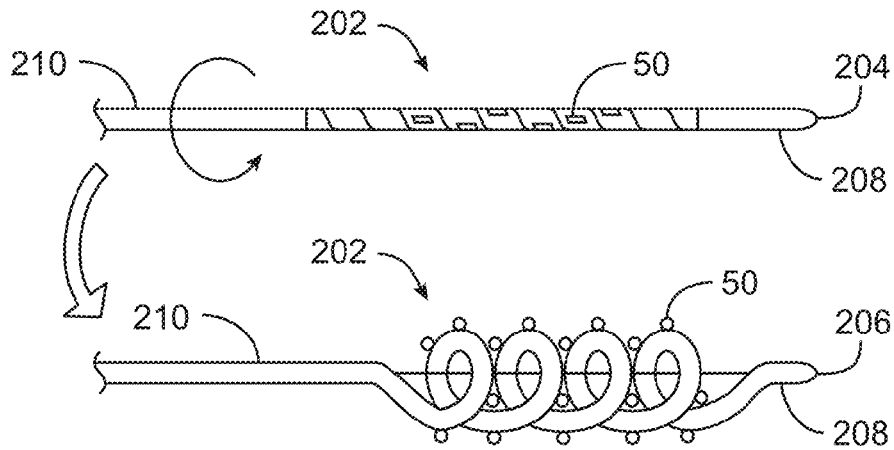
22 Claims, 39 Drawing Sheets