US009410801B2

(12) **United States Patent**
**Buchanan et al.**

(10) **Patent No.: US 9,410,801 B2**
(45) **Date of Patent: Aug. 9, 2016**

(54) **SCANNER**

(75) Inventors: **Alastair Buchanan**, Great Boughton (GB); **John Mitchell**, Menal Bridge (GB)

(73) Assignee: **Cadscan Limited**, Chester (GB)

( * ) Notice: Subject to any disclaimer, the term of this patent is extended or adjusted under 35 U.S.C. 154(b) by 421 days.

(21) Appl. No.: **14/005,665**

(22) PCT Filed: **Mar. 15, 2012**

(86) PCT No.: **PCT/GB2012/000244**
§ 371 (c)(1),
(2), (4) Date: **Dec. 4, 2013**

(87) PCT Pub. No.: **WO2012/123703**
PCT Pub. Date: **Sep. 20, 2012**

(65) **Prior Publication Data**

US 2014/0085424 A1 Mar. 27, 2014

(30) **Foreign Application Priority Data**

Mar. 17, 2011 (GB) ..... 1104529.1
Jan. 18, 2012 (GB) ..... 1200776.1

(51) **Int. Cl.**
***H04N 13/02*** (2006.01)
***G01B 11/25*** (2006.01)

(52) **U.S. Cl.**
CPC ..... ***G01B 11/254*** (2013.01); ***G01B 11/2527*** (2013.01); ***H04N 13/02*** (2013.01)

(58) **Field of Classification Search**
CPC ..... G01B 11/254; H04N 13/02
See application file for complete search history.

(56) **References Cited**

U.S. PATENT DOCUMENTS

6,455,835 B1 * 9/2002 Bernardini ..... G06T 7/0067 250/208.1
7,525,669 B1 4/2009 Abdollahi
2006/0077398 A1 * 4/2006 Cantin ..... G01B 11/25 356/512
2007/0115484 A1 * 5/2007 Huang ..... G01B 11/2527 356/604
2011/0298896 A1 * 12/2011 Dillon ..... G02B 27/48 348/46
2012/0154618 A1 * 6/2012 Markovic ..... G06T 15/205 348/222.1

FOREIGN PATENT DOCUMENTS

EP 2272417 A1 12/2011
WO WO 2005119449 A3 4/2007
WO WO 2010012838 A1 4/2010

OTHER PUBLICATIONS

EPO—International Search Report, Jul. 11, 2012.

* cited by examiner

*Primary Examiner* — Dave Czekaj
*Assistant Examiner* — Nam Pham
(74) *Attorney, Agent, or Firm* — Dority & Manning, P.A.

(57) **ABSTRACT**

A method for 3D imaging using phase shifted structured light, in which projection means project multiple phase shifted mask images of a transmission mask on to an object scene, the mask images being captured by a camera to form a camera image, depth information being derived from the camera image by measurement of the camera image and computation from the measurement for each of the phase shifted fringe patterns and a 3D scanner carrying out the method.
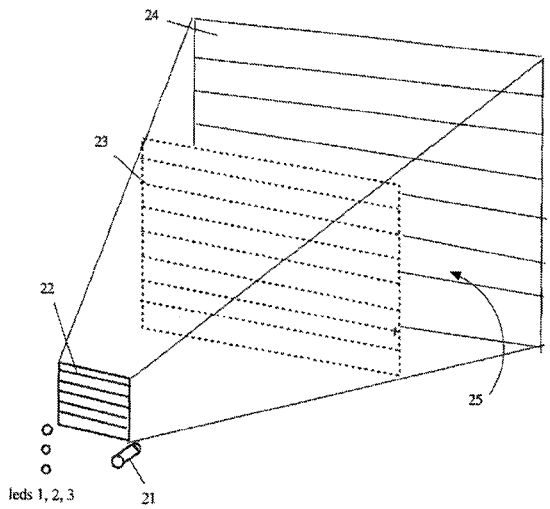
**16 Claims, 4 Drawing Sheets**