US009510501B2

(12) **United States Patent**
Gebbeken et al.

(10) **Patent No.: US 9,510,501 B2**
(45) **Date of Patent: Dec. 6, 2016**

(54) **DISPENSING SYSTEM FOR AN AGRICULTURAL SPREADER MACHINE**

(71) Applicant: **LEMKEN GmbH & Co. KG**, Alpen (DE)

(72) Inventors: **Martin Gebbeken**, Alpen (DE); **Christian Paessens**, Issum (DE); **Dieter Werries**, Alpen (DE); **Thomas Lukas**, Ahaus Wüllen (DE); **Mark Berendsen**, AJ Lengel (NL); **Marcel Geraats**, Nettetal (DE); **Christian Gotzen**, Viersen (DE)

(73) Assignee: **LEMKEN GmbH & Co. KG**, Alpen (DE)

(*) Notice: Subject to any disclaimer, the term of this patent is extended or adjusted under 35 U.S.C. 154(b) by 0 days.

(21) Appl. No.: **15/027,051**

(22) PCT Filed: **Sep. 26, 2014**

(86) PCT No.: **PCT/DE2014/100344**

§ 371 (c)(1),
(2) Date: **Apr. 4, 2016**

(87) PCT Pub. No.: **WO2015/048943**

PCT Pub. Date: **Apr. 9, 2015**

(65) **Prior Publication Data**

US 2016/0234998 A1 Aug. 18, 2016

(30) **Foreign Application Priority Data**

Oct. 2, 2013 (DE) 10 2013 110 991

(51) **Int. Cl.**
B65G 53/46 (2006.01)
A01C 7/12 (2006.01)
(Continued)

(52) **U.S. Cl.**
CPC ***A01C 7/127*** (2013.01); ***A01C 7/082*** (2013.01); ***B65G 53/06*** (2013.01);
(Continued)

(58) **Field of Classification Search**
CPC . B65G 53/46; B65G 53/4615; B65G 53/4683; B65D 90/626
(Continued)

(56) **References Cited**

U.S. PATENT DOCUMENTS

270,198 A 1/1883 Aumock
3,710,980 A * 1/1973 Henry B65B 1/36 222/267
(Continued)

FOREIGN PATENT DOCUMENTS

DE 807722 C 7/1951
DE 74138 11/1969
(Continued)

Primary Examiner — Joseph Dillon, Jr.
(74) *Attorney, Agent, or Firm* — James Creighton Wray; Meera P. Narasimhan

(57) **ABSTRACT**

A metering system is proposed for an agricultural distributor for dispensing granular or granulated material with which a vertical cell wheel arrangement in combination with an adjustable cell wheel floor achieves great variability of the adjustable metering volumes with reduced drive energy requirement.
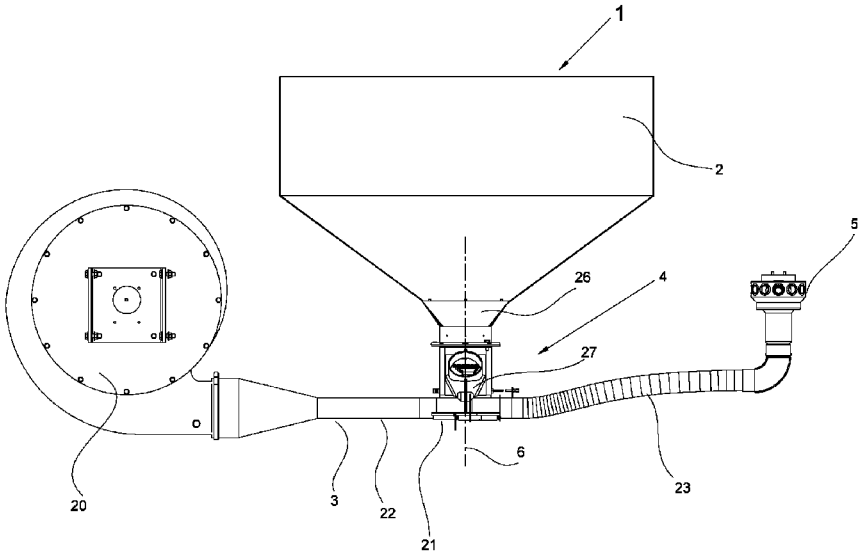
16 Claims, 4 Drawing Sheets