US009410501B2

(12) **United States Patent**
Aten

(10) **Patent No.: US 9,410,501 B2**
(45) **Date of Patent: Aug. 9, 2016**

(54) **TRANSLATING SLEEVE ACTUATION SYSTEM AND APPARATUS**

(71) Applicant: **ROHR, INC.**, Chula Vista, CA (US)

(72) Inventor: **Michael Aten**, San Diego, CA (US)

(73) Assignee: **ROHR, INC.**, Chula Vista, CA (US)

(*) Notice: Subject to any disclaimer, the term of this patent is extended or adjusted under 35 U.S.C. 154(b) by 127 days.

(21) Appl. No.: **14/262,530**

(22) Filed: **Apr. 25, 2014**

(65) **Prior Publication Data**

US 2015/0308382 A1 Oct. 29, 2015

(51) **Int. Cl.**

F02K 1/76	(2006.01)
F02K 1/72	(2006.01)
F02K 1/56	(2006.01)

(52) **U.S. Cl.**

CPC ***F02K 1/763*** (2013.01); ***F02K 1/566*** (2013.01); ***F02K 1/72*** (2013.01); *Y02T 50/671* (2013.01)

(58) **Field of Classification Search**

CPC F02K 1/72; F02K 1/763; F02K 1/766
See application file for complete search history.

(56) **References Cited**

U.S. PATENT DOCUMENTS

4,278,220	A *	7/1981	Johnston	F02K 1/72 244/110 B
4,442,987	A *	4/1984	Legrand	B64D 29/08 239/265.25
4,519,561	A *	5/1985	Timms	F02K 1/605 239/265.33
6,592,074	B2 *	7/2003	Dehu	F02K 1/72 244/110 B
2002/0125370	A1	9/2002	Dehu et al.	
2009/0188233	A1 *	7/2009	Vauchel	F02K 1/09 60/226.2
2010/0192715	A1 *	8/2010	Vauchel	F02K 1/763 74/89.35
2011/0016846	A1 *	1/2011	Maalioune	F02K 1/763 60/226.2
2014/0061332	A1 *	3/2014	Dezeustre	F02K 1/72 239/265.19

OTHER PUBLICATIONS

Extended European Search Report dated Sep. 16, 2015 in European Application No. 15164372.3.

* cited by examiner

Primary Examiner — Phutthiwat Wongwian
Assistant Examiner — Stefan Ibroni
(74) *Attorney, Agent, or Firm* — Snell & Wilmer, L.L.P.

(57) **ABSTRACT**

A translating sleeve actuation system is provided. The translating sleeve actuation system may be configured with one or more screws coupled to one or more motors configured to drive the screws. The screws may be disposed in channels defined in the track beams. The translating sleeve actuation system may also comprise one or more shuttles configured to translate forward and aft along the screw in the track beam channels.
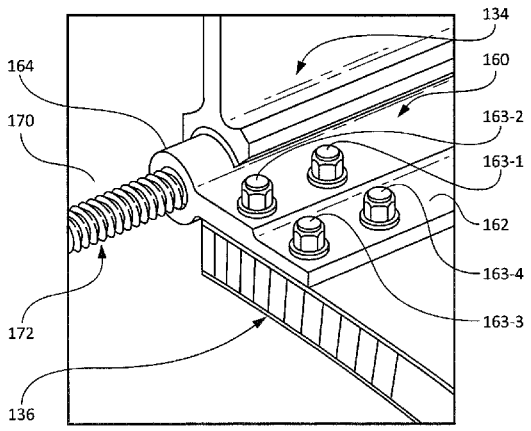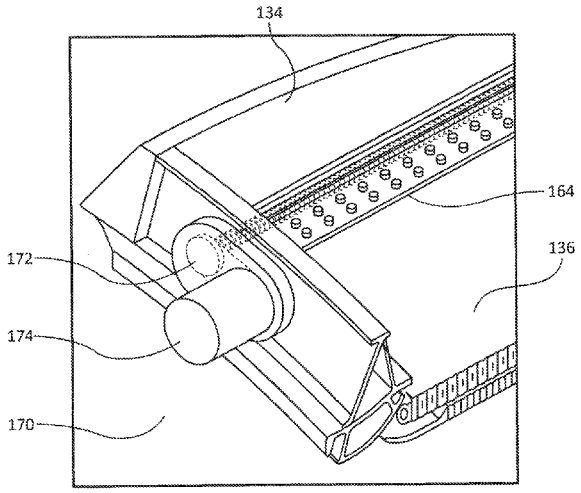
15 Claims, 6 Drawing Sheets