US009409501B2

(12) **United States Patent**
Henry

(10) **Patent No.: US 9,409,501 B2**
(45) **Date of Patent: Aug. 9, 2016**

(54) **EXERCISER FOR CAR**

(71) Applicant: **Will Henry**, Brooklyn, NY (US)

(72) Inventor: **Will Henry**, Brooklyn, NY (US)

(*) Notice: Subject to any disclaimer, the term of this patent is extended or adjusted under 35 U.S.C. 154(b) by 0 days.

(21) Appl. No.: **14/628,229**

(22) Filed: **Feb. 21, 2015**

(65) **Prior Publication Data**

US 2015/0238800 A1 Aug. 27, 2015

Related U.S. Application Data

(60) Provisional application No. 61/943,351, filed on Feb. 22, 2014.

(51) **Int. Cl.**

A63B 21/02	(2006.01)
A63B 21/045	(2006.01)
A63B 21/05	(2006.01)
A63B 21/04	(2006.01)
B60N 2/44	(2006.01)
A63B 21/055	(2006.01)
A63B 23/035	(2006.01)
A63B 21/00	(2006.01)

(52) **U.S. Cl.**

CPC ***B60N 2/448*** (2013.01); ***A63B 21/00069*** (2013.01); ***A63B 21/0442*** (2013.01); ***A63B 21/0552*** (2013.01); ***A63B 21/1609*** (2015.10); ***A63B 21/4035*** (2015.10); ***A63B 23/03541*** (2013.01); *A63B 21/00061* (2013.01); *A63B 2210/50* (2013.01); *B60N 2002/4405* (2013.01)

(58) **Field of Classification Search**

CPC A63B 21/00058; A63B 21/00061; A63B 21/00069; A63B 21/00072; A63B 21/00043; A63B 21/0552; A63B 21/151; A63B 21/153; A63B 21/4035; A63B 21/04; A63B 21/0442; A63B 21/045; A63B 21/0455; A63B 21/055; A63B 21/0557; A63B 21/1609; A63B 23/03541; A63B 2208/0233; B60N 2/448; B60N 2/688; B60N 2002/4405; B60R 22/26; B60R 22/34; B60R 2021/022; B60R 2022/286

See application file for complete search history.

(56) **References Cited**

U.S. PATENT DOCUMENTS

5,141,482	A *	8/1992	Hern	A63B 21/0552 482/123
5,234,394	A *	8/1993	Wilkinson	A63B 21/055 482/121
5,618,249	A *	4/1997	Marshall	A63B 21/153 482/115
5,792,034	A *	8/1998	Kozlovsky	A63B 21/0004 482/124
6,159,133	A *	12/2000	Shugg	A63B 21/023 482/121
6,183,403	B1 *	2/2001	Dunn	A63B 21/0552 482/121
6,500,103	B2 *	12/2002	Porter	A63B 21/0414 297/468
7,611,450	B2 *	11/2009	Mancini	A63B 21/04 482/123
8,932,191	B2 *	1/2015	Failer	A63B 21/008 482/112
8,939,874	B2 *	1/2015	Mizrachy	A63B 21/0552 482/124

(Continued)

Primary Examiner — Oren Ginsberg
Assistant Examiner — Joshua Lee
(74) *Attorney, Agent, or Firm* — Law Offices of Leo Mikityanskiy, P.C.; Leonid Mikityanskiy

(57) **ABSTRACT**

A portable exerciser that fits in a car that allows the user to exercise in traffic when the vehicle is not moving, or while the car is parked. The exerciser includes a body, resistance elements attached to the body and a tension adjuster, and handles attached to the resistance elements so that the user may exercise. The resistance elements are adjustable using the tension adjuster or replaceable for selecting the proper tension for any user. The exerciser is mounted behind or in front of the car seat, which can be the driver seat or the passenger seat.
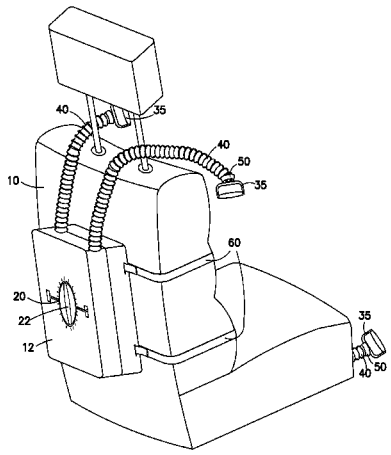
20 Claims, 11 Drawing Sheets