US009409401B2

(12) **United States Patent**
Jefferson et al.

(10) **Patent No.: US 9,409,401 B2**
(45) **Date of Patent: Aug. 9, 2016**

(54) **WIPER FOR AN INKJET PRINTER**

(75) Inventors: **Jafar N. Jefferson**, Vancouver, WA (US); **Teressa L Roth**, Brush Prairie, WA (US); **Jennifer Peterson**, Washougal, WA (US)

(73) Assignee: **HEWLETT-PACKARD DEVELOPMENT COMPANY, L.P.**, Houston, TX (US)

(*) Notice: Subject to any disclaimer, the term of this patent is extended or adjusted under 35 U.S.C. 154(b) by 0 days.

(21) Appl. No.: **13/638,328**

(22) PCT Filed: **Apr. 30, 2010**

(86) PCT No.: **PCT/US2010/033110**

§ 371 (c)(1),
(2), (4) Date: **Sep. 28, 2012**

(87) PCT Pub. No.: **WO2011/136790**

PCT Pub. Date: **Nov. 3, 2011**

(65) **Prior Publication Data**

US 2013/0021409 A1 Jan. 24, 2013

(51) **Int. Cl.**
B41J 2/165 (2006.01)

(52) **U.S. Cl.**
CPC ***B41J 2/16538*** (2013.01)

(58) **Field of Classification Search**
None
See application file for complete search history.

(56) **References Cited**

U.S. PATENT DOCUMENTS

5,500,660	A	3/1996	Childers et al.	
6,702,423	B2 *	3/2004	Okamura et al.	347/33
6,883,897	B2 *	4/2005	Kinoshita et al.	347/33
2002/0122092	A1	9/2002	Okamura	
2005/0062796	A1	3/2005	Mott et al.	
2008/0218553	A1 *	9/2008	Ito	347/33

FOREIGN PATENT DOCUMENTS

CN	2209591	10/1995
CN	1468715	1/2004
CN	2790759	6/2006
DE	69614063 T2	6/2002
DE	69909888 T2	2/2004
DE	69723948 T2	9/2004
EP	0960735	12/1999
JP	6023999	2/1994
JP	2000006437	1/2000
JP	2005067028	3/2005
JP	2005212165	8/2005

OTHER PUBLICATIONS

PCT Search Report mailed Feb. 7, 2011, 9 pgs.

* cited by examiner

Primary Examiner — Alejandro Valencia

(74) *Attorney, Agent, or Firm* — Dicke Billig & Czaja

(57) **ABSTRACT**

In an inkjet printer having a small print head assembly and a large print head assembly, a wiper includes a first wiper section having a width approximately equal to a width of an orifice area of the small print head assembly, a decoupler adjacent to the first wiper section, a second wiper section adjacent to the decoupler, where the first and the second wiper sections and the decoupler combined have a width approximately equal to a width of an orifice area of the large print head assembly, and a squared tip at an extremity of the single, segmented wiper to impede wicking action. A tab holds the wiper oriented so as to wipe the print head assemblies in a direction of a printing operation.
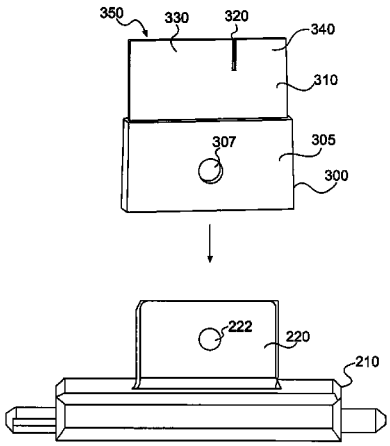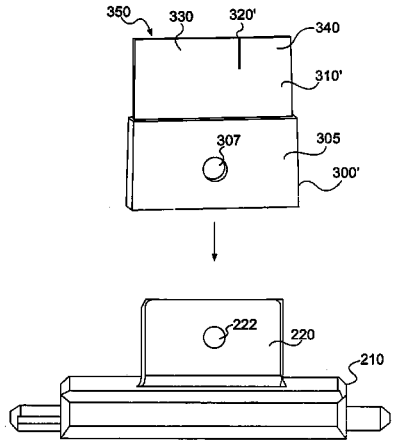
13 Claims, 9 Drawing Sheets