US009409301B2

(12) **United States Patent**
Kuijper et al.

(10) **Patent No.: US 9,409,301 B2**
(45) **Date of Patent: Aug. 9, 2016**

(54) **CAP WITH MULTI-ANGLE ANNULAR CORRUGATION SURFACES FOR SHAVING APPARATUS**

(75) Inventors: **Andre Kuijper**, Drachten (NL); **Erik Houbolt**, Drachten (NL); **Martin Leonard Bakker**, Drachten (NL); **Willem Drachten**, Drachten (NL)

(73) Assignee: **KONINKLIJKE PHILIPS N.V.**, Eindhoven (NL)

(*) Notice: Subject to any disclaimer, the term of this patent is extended or adjusted under 35 U.S.C. 154(b) by 1569 days.

(21) Appl. No.: **12/515,963**

(22) PCT Filed: **Nov. 21, 2007**

(86) PCT No.: **PCT/IB2007/054733**

§ 371 (c)(1),
(2), (4) Date: **Jan. 14, 2010**

(87) PCT Pub. No.: **WO2008/065582**

PCT Pub. Date: **Jun. 5, 2008**

(65) **Prior Publication Data**

US 2010/0139098 A1 Jun. 10, 2010

(30) **Foreign Application Priority Data**

Nov. 28, 2006 (EP) 06124911

(51) **Int. Cl.**
B26B 19/14 (2006.01)

(52) **U.S. Cl.**
CPC ***B26B 19/143*** (2013.01)

(58) **Field of Classification Search**
CPC B26B 19/143
USPC 30/43.4–43.6
See application file for complete search history.

(56) **References Cited**

U.S. PATENT DOCUMENTS

2,291,852	A	8/1942	Weatherford	
2,632,948	A	3/1953	Konrad	
3,116,551	A	1/1964	Anton	
3,636,626	A	1/1972	Zuurveen	
4,393,586	A	7/1983	Hamashima et al.	
5,544,414	A *	8/1996	Dekker et al.	30/43.6
5,625,950	A	5/1997	Sterk et al.	
5,867,908	A *	2/1999	Van Veen et al.	30/43.6
6,085,421	A *	7/2000	Jorna et al.	30/43.6
6,145,200	A *	11/2000	Jorna et al.	30/43.6
6,199,282	B1 *	3/2001	Uchiyama et al.	30/43.6
6,868,611	B2 *	3/2005	Geertsma et al.	30/43.6

(Continued)

FOREIGN PATENT DOCUMENTS

EP	0566292 A1	10/1993
EP	1683609 A1	7/2006

(Continued)

Primary Examiner — Jason Daniel Prone

(57) **ABSTRACT**

A cap for a shaving head of a shaving apparatus has a skin contacting surface including at least two annular corrugations. The shape of the skin contacting surface of the cap is adapted to realizing a high feeling of comfort for a user of the shaving apparatus. A factor contributing to the feeling of comfort is that an annular central surface of an outermost corrugation has an orientation that is out of line with an expected course of an imaginary smooth flowing plane following a central surface of an adjacent corrugation, where a drooping configuration of the central surface of the outermost corrugation with respect to the central surface of the adjacent corrugation is realized.
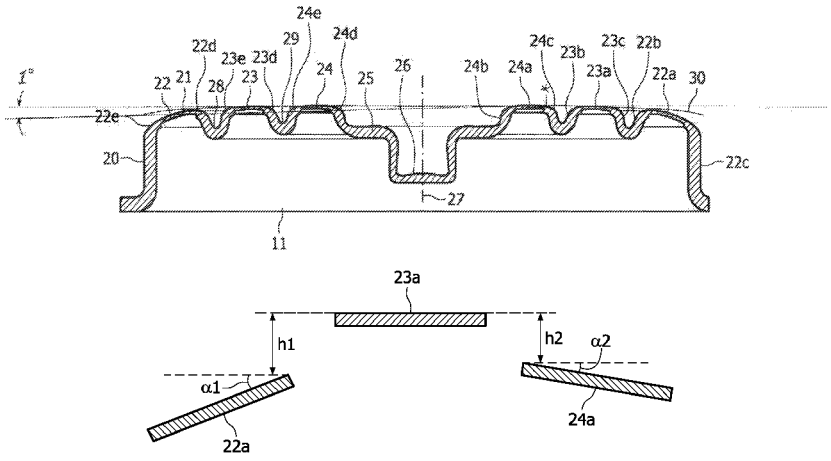
13 Claims, 4 Drawing Sheets