US009408701B2

(12) **United States Patent**
Thomas et al.

(10) **Patent No.: US 9,408,701 B2**
(45) **Date of Patent: Aug. 9, 2016**

(54) **REUSABLE ORTHOPAEDIC INSTRUMENT**

(71) Applicants: **Kyle B. Thomas**, Denver, CO (US); **Thomas E. Wogoman**, Warsaw, IN (US)

(72) Inventors: **Kyle B. Thomas**, Denver, CO (US); **Thomas E. Wogoman**, Warsaw, IN (US)

(73) Assignee: **DEPUY (IRELAND)** (IE)

(*) Notice: Subject to any disclaimer, the term of this patent is extended or adjusted under 35 U.S.C. 154(b) by 423 days.

(21) Appl. No.: **13/830,940**

(22) Filed: **Mar. 14, 2013**

(65) **Prior Publication Data**

US 2013/0204385 A1 Aug. 8, 2013

Related U.S. Application Data

(63) Continuation of application No. 13/457,752, filed on Apr. 27, 2012, which is a continuation of application No. 12/241,764, filed on Sep. 30, 2008, now Pat. No. 8,187,283.

(51) **Int. Cl.**

A61F 2/38	(2006.01)
A61F 2/46	(2006.01)
A61F 2/30	(2006.01)

(52) **U.S. Cl.**

CPC ***A61F 2/3859*** (2013.01); ***A61F 2/389*** (2013.01); ***A61F 2/4684*** (2013.01); *A61F 2/38* (2013.01); *A61F 2002/30691* (2013.01); *A61F 2002/30772* (2013.01)

(58) **Field of Classification Search**

CPC A61F 2/3859; A61F 2/46; A61F 2/461
USPC 623/20.35, 20.16, 20.31
See application file for complete search history.

(56) **References Cited**

U.S. PATENT DOCUMENTS

3,605,527	A	9/1971	Gambale	
4,721,104	A	1/1988	Kaufman et al.	
4,950,298	A	8/1990	Gustilo et al.	
5,417,693	A *	5/1995	Sowden	A61B 17/1659 269/234
5,702,464	A	12/1997	Lackey et al.	
5,732,992	A *	3/1998	Mauldin	A61F 2/461 269/134
5,755,800	A *	5/1998	O'Neil	A61F 2/30734 623/20.16
5,776,201	A *	7/1998	Colleran	A61F 2/4684 606/88
6,093,184	A	7/2000	Campbell et al.	
6,827,739	B2	12/2004	Griner et al.	
8,187,283	B2 *	5/2012	Thomas	A61F 2/4684 606/102
8,551,179	B2 *	10/2013	Jones	A61F 2/3859 623/20.31
2003/0225457	A1 *	12/2003	Justin	A61F 2/3859 623/20.14
2004/0039450	A1 *	2/2004	Griner	A61B 17/155 623/20.31
2004/0153086	A1	8/2004	Sanford	
2004/0172137	A1 *	9/2004	Blaylock	A61F 2/30734 623/20.16
2004/0230197	A1	11/2004	Tornier et al.	

(Continued)

FOREIGN PATENT DOCUMENTS

GB	2420715	A	7/2006
JP	2003164460	A	6/2003

(Continued)

Primary Examiner — Christian Sevilla
(74) *Attorney, Agent, or Firm* — Barnes & Thornburg LLP

(57) **ABSTRACT**

A reusable orthopedic instrument includes a reusable orthopedic trial having a first outer surface and a second outer surface that is opposite the first outer surface. A notch is formed in each side of the orthopedic instrument.
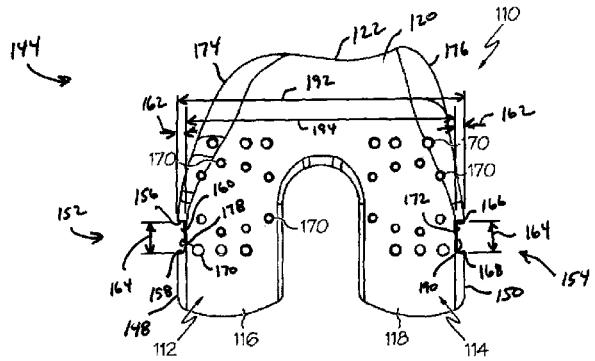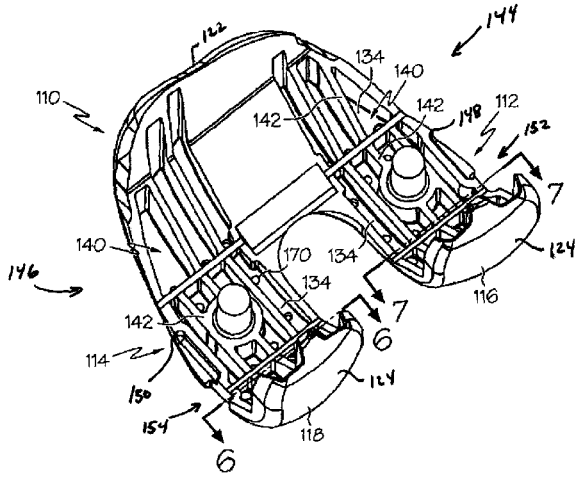
15 Claims, 9 Drawing Sheets