US009408501B2

(12) **United States Patent**
Erlebach

(10) **Patent No.: US 9,408,501 B2**
(45) **Date of Patent: Aug. 9, 2016**

(54) **SHOWER STALL CURB COVER**

(71) Applicant: **Josef Erlebach**, Silverthorne, CO (US)

(72) Inventor: **Josef Erlebach**, Silverthorne, CO (US)

(*) Notice: Subject to any disclaimer, the term of this patent is extended or adjusted under 35 U.S.C. 154(b) by 233 days.

(21) Appl. No.: **14/486,427**

(22) Filed: **Sep. 15, 2014**

(65) **Prior Publication Data**

US 2015/0074898 A1 Mar. 19, 2015

Related U.S. Application Data

(60) Provisional application No. 61/879,234, filed on Sep. 18, 2013.

(51) **Int. Cl.**

A47K 3/00	(2006.01)
B21D 39/03	(2006.01)
A47K 3/40	(2006.01)

(52) **U.S. Cl.**

CPC ***A47K 3/40*** (2013.01); *Y10T 29/49826* (2015.01)

(58) **Field of Classification Search**

CPC A47K 3/40
USPC 4/612–614
See application file for complete search history.

(56) **References Cited**

U.S. PATENT DOCUMENTS

6,006,375 A * 12/1999 Carr A47K 3/40 4/609
2010/0071125 A1* 3/2010 Miller A47K 3/40 4/613

* cited by examiner

Primary Examiner — Huyen Le
Assistant Examiner — Christine Skubinna
(74) *Attorney, Agent, or Firm* — Leyendecker & Lemire LLC

(57) **ABSTRACT**

A three dimensional structure comprised of a flexible sheet material referred to herein as a curb cover is described that can be easily secured with adhesive or resin over the intersection of a shower stall floor, a shower stall wall, and a step over curb. The curb cover is used in conjunction with a waterproof membrane to waterproof the shower pan and up portions of the surrounding wall and step over curb.
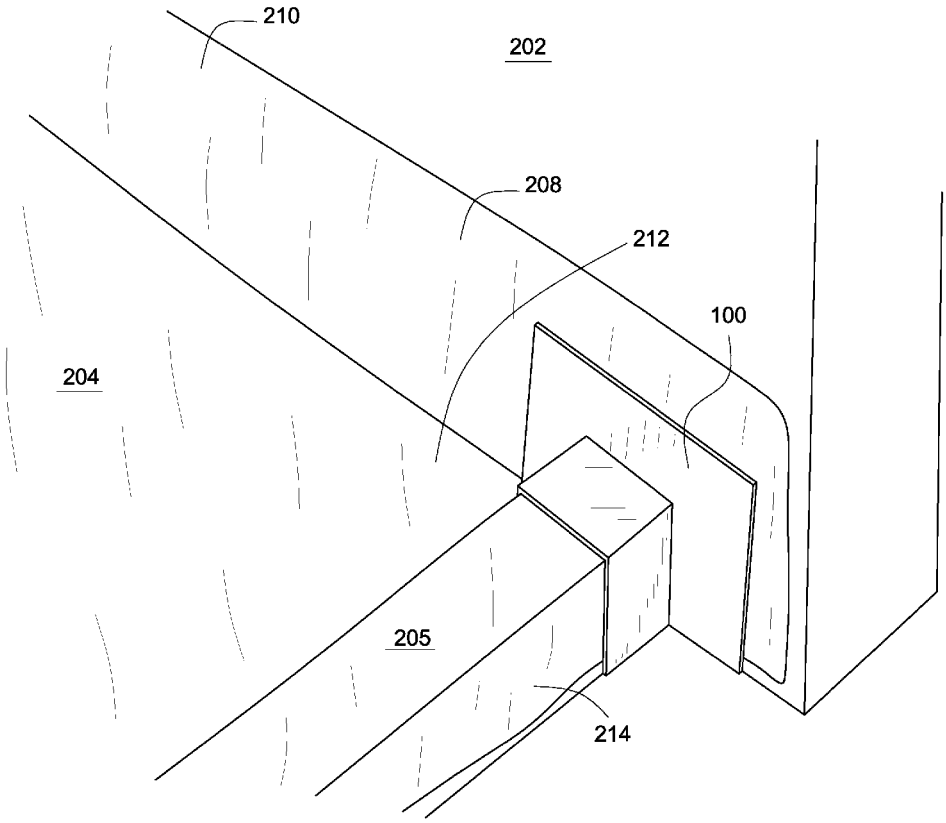
20 Claims, 7 Drawing Sheets