J. F. ROGERS.

CAR TRUCK.

No. 6,901. Patented Nov. 27, 1849.

Fig. 1

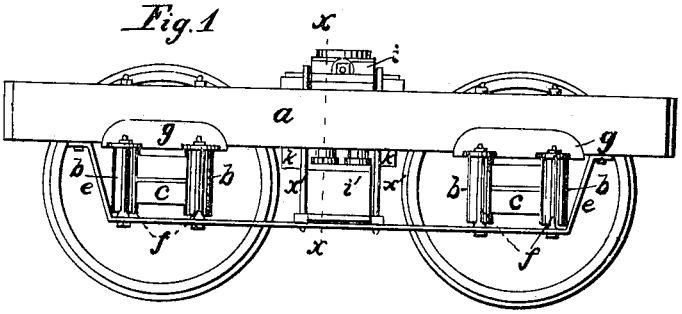

Fig. 2.

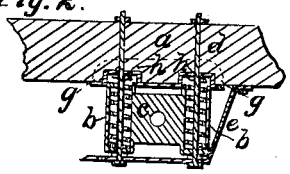

Fig. 3.

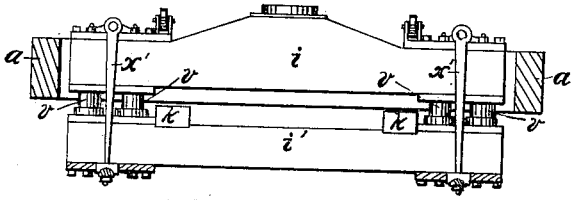

Fig. 4.

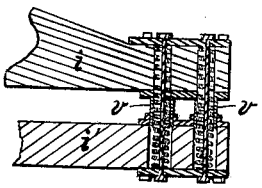

THE NORRIS PETERS CO., PHOTO-LITHO., WASHINGTON, D. C.