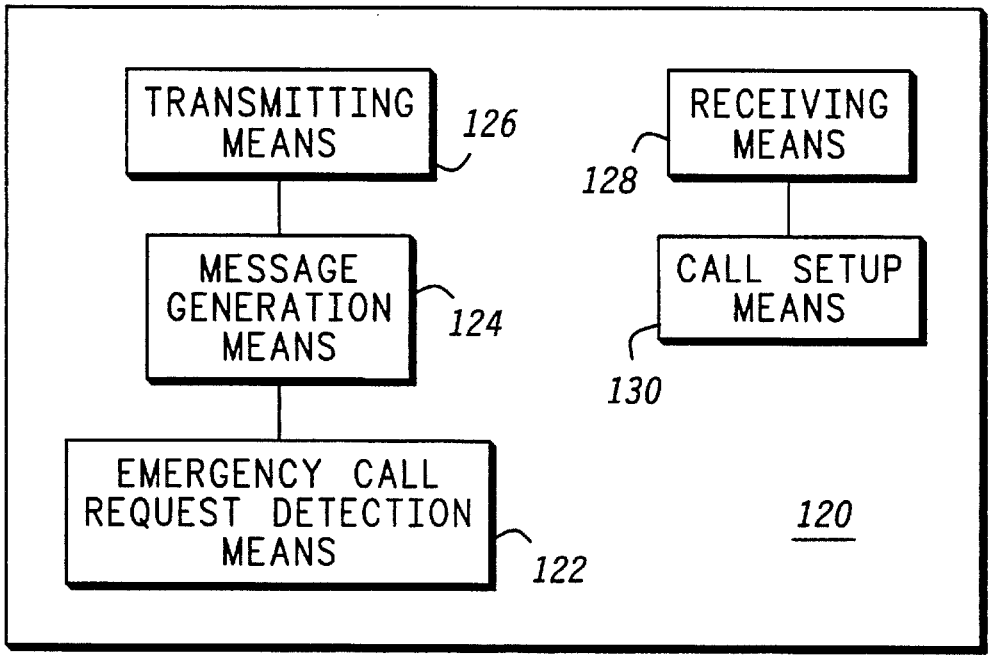
TRANSMITTING MEANS
126
RECEIVING MEANS
128
MESSAGE GENERATION MEANS
124
CALL SETUP MEANS
130
EMERGENCY CALL REQUEST DETECTION MEANS
122
120

FIG. 3

FIG. 4

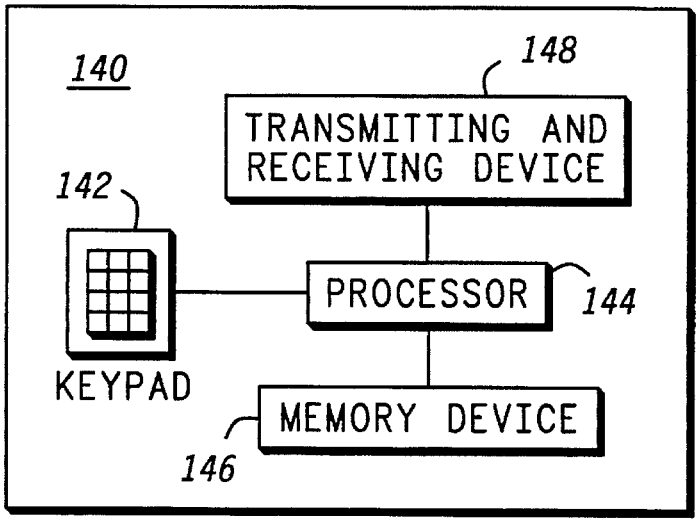
140
148
TRANSMITTING AND RECEIVING DEVICE
142
PROCESSOR
144
KEYPAD
MEMORY DEVICE
146