US009201501B2

(12) **United States Patent**
Maizels et al.

(10) **Patent No.: US 9,201,501 B2**
(45) **Date of Patent: Dec. 1, 2015**

(54) **ADAPTIVE PROJECTOR**

(71) Applicant: **PRIMESENSE LTD.**, Tel Aviv (IL)

(72) Inventors: **Aviad Maizels**, Ramat Hasharon (IL); **Alexander Shpunt**, Tel Aviv (IL); **Tamir Berliner**, Beit Hashmonay (IL)

(73) Assignee: **APPLE INC.**, Cupertino, CA (US)

(*) Notice: Subject to any disclaimer, the term of this patent is extended or adjusted under 35 U.S.C. 154(b) by 488 days.

(21) Appl. No.: **13/726,129**

(22) Filed: **Dec. 23, 2012**

(65) **Prior Publication Data**

US 2013/0106692 A1 May 2, 2013

Related U.S. Application Data

(63) Continuation-in-part of application No. PCT/IB2011/053192, filed on Jul. 18, 2011.

(60) Provisional application No. 61/365,788, filed on Jul. 20, 2010.

(51) **Int. Cl.**

G06F 3/01	(2006.01)
G06T 19/00	(2011.01)
H04N 13/00	(2006.01)
H04N 13/04	(2006.01)

(52) **U.S. Cl.**

CPC ***G06F 3/013*** (2013.01); ***G06F 3/011*** (2013.01); ***G06F 3/017*** (2013.01); ***G06T 19/006*** (2013.01); ***H04N 13/0055*** (2013.01); ***H04N 13/0468*** (2013.01); *H04N 13/044* (2013.01); *H04N 13/0459* (2013.01); *H04N 13/0484* (2013.01)

(58) **Field of Classification Search**

None

See application file for complete search history.

(56) **References Cited**

U.S. PATENT DOCUMENTS

4,550,250	A	10/1985	Mueller et al.
4,789,921	A	12/1988	Aho
4,988,981	A	1/1991	Zimmerman et al.
5,495,576	A	2/1996	Ritchey
5,588,139	A	12/1996	Lanier et al.
5,594,469	A	1/1997	Freeman et al.
5,846,134	A	12/1998	Latypov
5,852,672	A	12/1998	Lu
5,862,256	A	1/1999	Zetts et al.
5,864,635	A	1/1999	Zetts et al.
5,870,196	A	2/1999	Lulli et al.

(Continued)

FOREIGN PATENT DOCUMENTS

JP	2002228413	A	8/2002
JP	2008090807	A	4/2008

(Continued)

OTHER PUBLICATIONS

Gordon et al., "The use of Dense Stereo Range Date in Augmented Reality", Proceedings of the 1st International Symposium on Mixed and Augmented Reality (ISMAR), Darmstadt, Germany, pp. 1-10, Sep. 30-Oct. 1, 2002.

(Continued)

Primary Examiner — Maurice L McDowell, Jr.

(74) *Attorney, Agent, or Firm* — D. Kligler I.P. Services LTD.

(57) **ABSTRACT**

An apparatus for processing data includes a projector, which is configured to project content onto at least a part of a scene. A processor is configured to detect a location of an eye of a person in the scene and to control the projector so as to reduce an intensity of the projected content in an area of the eye.
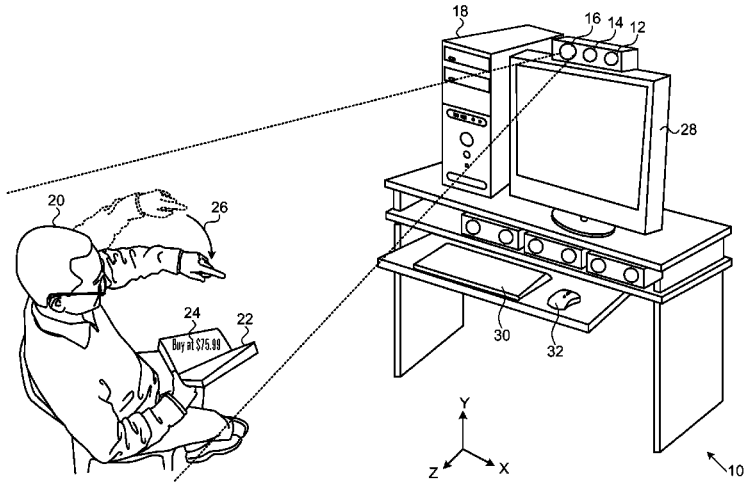
18 Claims, 7 Drawing Sheets