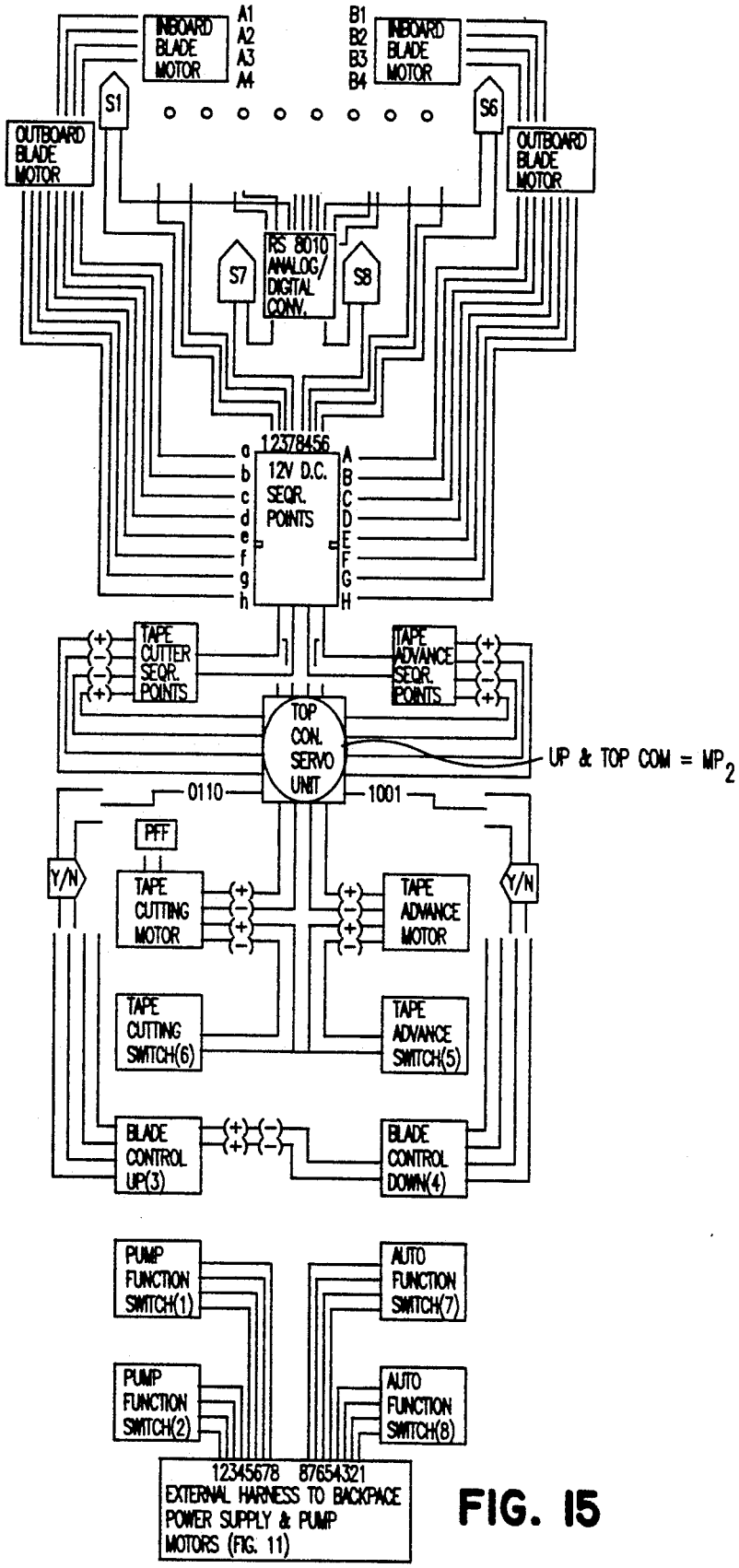
INBOARD BLADE MOTOR
A1
A2
A3
A4
B1
B2
B3
B4
INBOARD BLADE MOTOR
S1
S6
OUTBOARD BLADE MOTOR
OUTBOARD BLADE MOTOR
RS 8010 ANALOG/ DIGITAL CONV.
S7
S8
12378456
12V D.C. SEQR. POINTS
a
b
c
d
e
f
g
h
A
B
C
D
E
F
G
H
TAPE CUTTER SEQR. POINTS
TAPE ADVANCE SEQR. POINTS
TOP CON. SERVO UNIT
UP & TOP COM = MP2
0110
1001
PFF
Y/N
Y/N
TAPE CUTTING MOTOR
TAPE ADVANCE MOTOR
TAPE CUTTING SWITCH(6)
TAPE ADVANCE SWITCH(5)
BLADE CONTROL UP(3)
BLADE CONTROL DOWN(4)
PUMP FUNCTION SWITCH(1)
AUTO FUNCTION SWITCH(7)
PUMP FUNCTION SWITCH(2)
AUTO FUNCTION SWITCH(8)
12345678 87654321
EXTERNAL HARNESS TO BACKPACE POWER SUPPLY & PUMP MOTORS (FIG. 11)

FIG. 15