A. L. O. FAUCHON-VILLEPLEÉ.

ELECTRIC GUN OR APPARATUS FOR PROPELLING PROJECTILES.

APPLICATION FILED JULY 31, 1917.

1,370,200. **Patented Mar. 1, 1921.**

12 SHEETS—SHEET 1.

Fig. 1

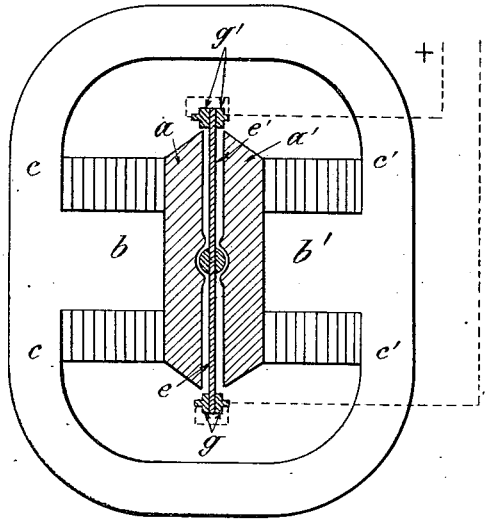

Fig. 3.

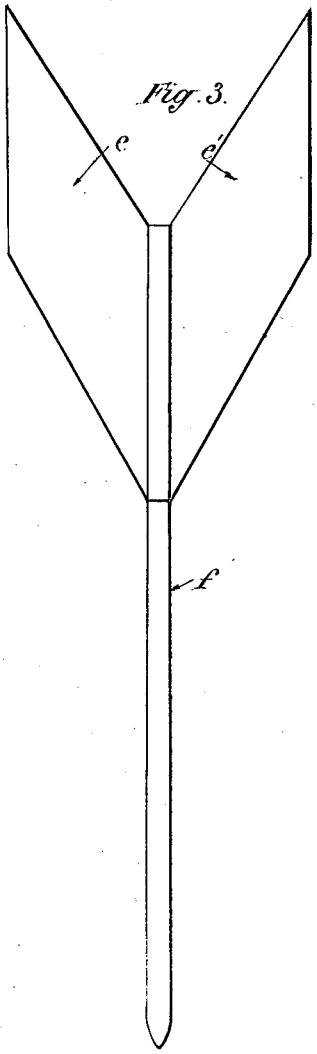

Fig. 2

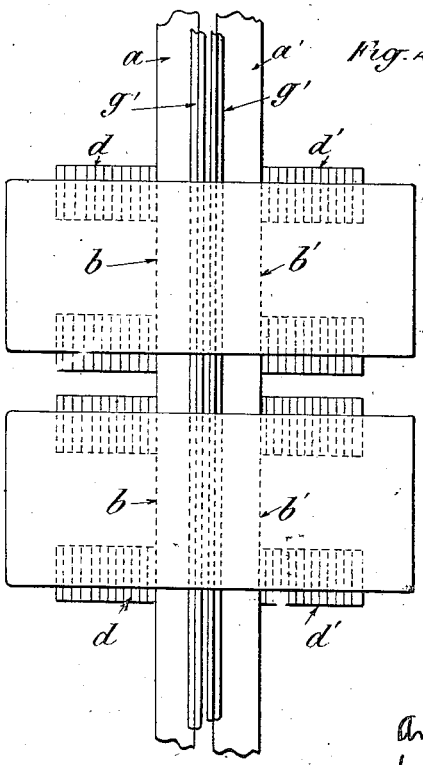

Inventor

André Louis Octave Fauchon-Villepleé

by Otto Munn

his Attorney