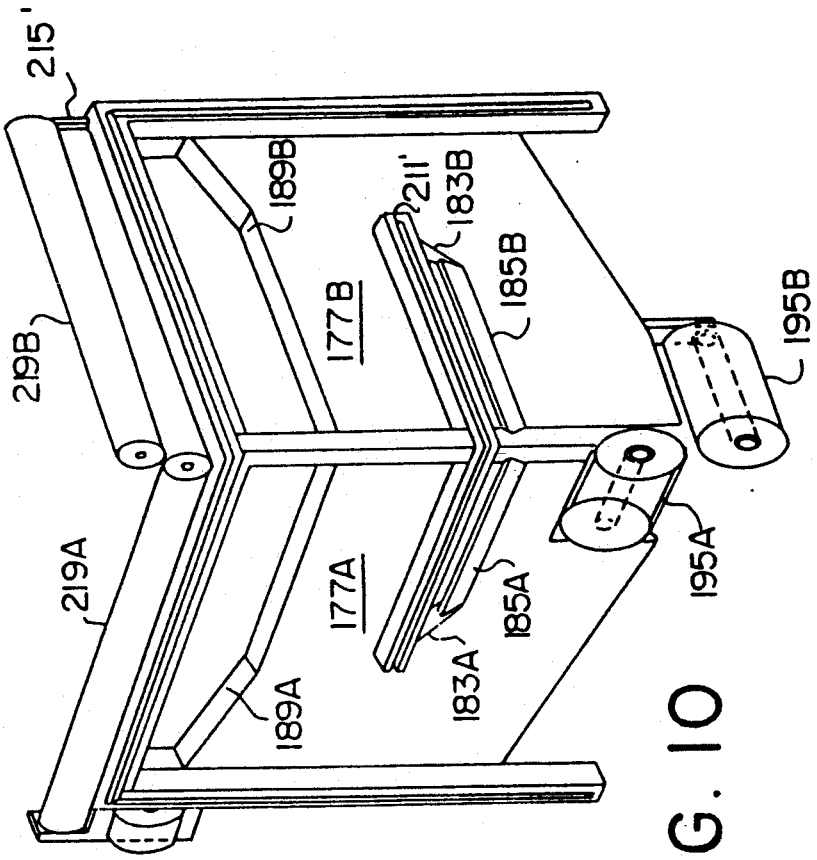
215'
219B
219A
189B
189A
177B
177A
211'
183B
183A
185B
185A
195B
195A

FIG. 10