US009638400B2

(12) **United States Patent**
Kang et al.

(10) **Patent No.: US 9,638,400 B2**
(45) **Date of Patent: May 2, 2017**

(54) **OLED LIGHTING MODULE**

(71) Applicant: **LG DISPLAY CO., LTD.**, Seoul (KR)

(72) Inventors: **Minsoo Kang**, Daejeon (KR); **Ducksu Oh**, Daejeon (KR); **Sung-Ryun Lim**, Incheon (KR); **Dong-Hyuk Heo**, Chungcheongbuk-do (KR)

(73) Assignee: **LG DISPLAY CO., LTD.**, Seoul (KR)

(*) Notice: Subject to any disclaimer, the term of this patent is extended or adjusted under 35 U.S.C. 154(b) by 104 days.

(21) Appl. No.: **14/428,226**

(22) PCT Filed: **Sep. 13, 2013**

(86) PCT No.: **PCT/KR2013/008312**

§ 371 (c)(1),
(2) Date: **Mar. 13, 2015**

(87) PCT Pub. No.: **WO2014/042467**

PCT Pub. Date: **Mar. 20, 2014**

(65) **Prior Publication Data**

US 2015/0247626 A1 Sep. 3, 2015

(30) **Foreign Application Priority Data**

Sep. 14, 2012 (KR) 10-2012-0102408

(51) **Int. Cl.**
H01L 51/50 (2006.01)
F21V 19/00 (2006.01)
(Continued)

(52) **U.S. Cl.**
CPC ***F21V 19/0025*** (2013.01); ***F21K 9/20*** (2016.08); ***H01L 51/50*** (2013.01); ***H05B 33/06*** (2013.01); ***H05B 33/145*** (2013.01); ***H05B 33/28*** (2013.01); ***H05K 1/189*** (2013.01); ***H05K 3/4015*** (2013.01); *F21Y 2105/00* (2013.01); *F21Y 2115/15* (2016.08); *H01L 2251/5361* (2013.01);
(Continued)

(58) **Field of Classification Search**
CPC H01L 2251/5361; H01L 51/50; H01L 51/5203; H01L 51/56; H05B 33/06; H05B 33/145; H05B 33/28; H05K 1/189; H05K 2201/053; H05K 2201/056; H05K 2201/09845; H05K 2201/10318; H05K 3/323; H05K 3/4015; F21Y 2105/00; F21Y 2115/15
See application file for complete search history.

(56) **References Cited**

U.S. PATENT DOCUMENTS

5,565,733 A 10/1996 Krafcik et al.
7,211,738 B2 * 5/2007 Lee G02F 1/13452 174/250
(Continued)

FOREIGN PATENT DOCUMENTS

CN 1414819 A 4/2003
CN 101371317 A 2/2009
(Continued)

Primary Examiner — Peggy Neils
(74) *Attorney, Agent, or Firm* — Dentons US LLP

(57) **ABSTRACT**

The present invention discloses a lighting module using an organic light emitting device (OLED) and particularly, a lighting module using the OLED which stably couples a power supply terminal to an electrode pad which is formed on a glass substrate of an OLED illumination plate.
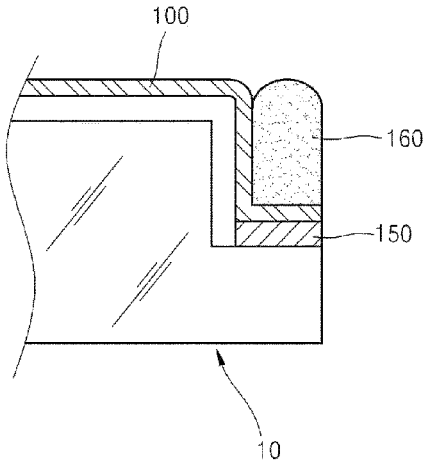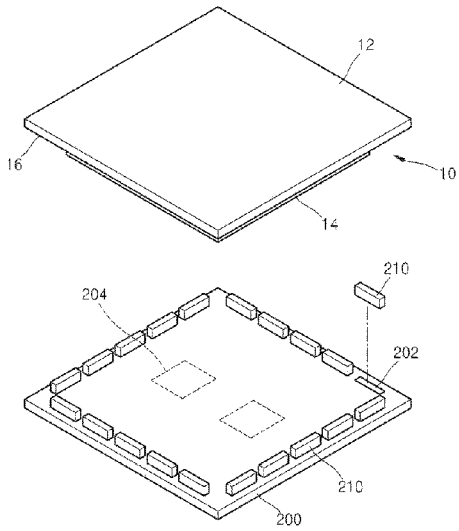
10 Claims, 7 Drawing Sheets