United States Patent [19]

Jensen

[11] **Patent Number: 4,836,700**

[45] **Date of Patent: Jun. 6, 1989**

[54] **DATA ENTRY SYSTEM**

[76] Inventor: **Paul S. Jensen,** P.O. Box 563, Los Altos, Calif. 94022

[21] Appl. No.: **850,475**

[22] Filed: **Apr. 10, 1986**

Related U.S. Application Data

[63] Continuation of Ser. No. 596,161, Apr. 2, 1984, abandoned.

[51] **Int. Cl.**[4] **B41J 5/10;** B41J 5/28

[52] **U.S. Cl.** **400/489;** 400/100; 400/486; 400/485; 340/529; 340/309.15; 341/21

[58] **Field of Search** ..... 400/100; 340/529, 712, 340/825.19, 365 E, 309.15; 364/709

[56] **References Cited**

U.S. PATENT DOCUMENTS

4,042,777	8/1977	Beqnaert et al.	400/100
4,310,254	1/1982	D'Angielillo et al.	400/486
4,323,888	4/1982	Cole	400/368
4,381,502	4/1983	Prame	400/100
4,443,789	4/1984	Endfield et al.	400/479
4,463,348	7/1984	Sidebottom	340/529
4,467,321	8/1984	Volnak	340/365 R
4,520,351	5/1985	Altman et al.	340/309.15
4,540,984	9/1985	Waldman	340/309.15
4,638,306	1/1987	Rollhaus et al.	400/100

FOREIGN PATENT DOCUMENTS

97816	1/1984	European Pat. Off.	400/365
38687	4/1981	Japan	400/253
2064187	6/1981	United Kingdom	400/100

OTHER PUBLICATIONS

Leimer, "Multiple Repeat Rate . . . ", IBM Technical Disclosure Bulletin, vol. 23, No. 2, p. 770, 7/80.

Bushmiaer et al., "Repeat Mechanism . . . ", IBM Technical Disclosure Bulletin, vol. 21, No. 5, pp. 1940–1941, 10/78.

Primary Examiner—William Pieprz

[57] **ABSTRACT**

A data entry system comprising a one-handed keyboard having five data keys and five control keys which are used in combinations for entering data and control characters in the system. The system also comprises a cursor control assembly for controlling a cursor on a screen and controls for permitting a single keyboard to be operated with either the left or right hand.
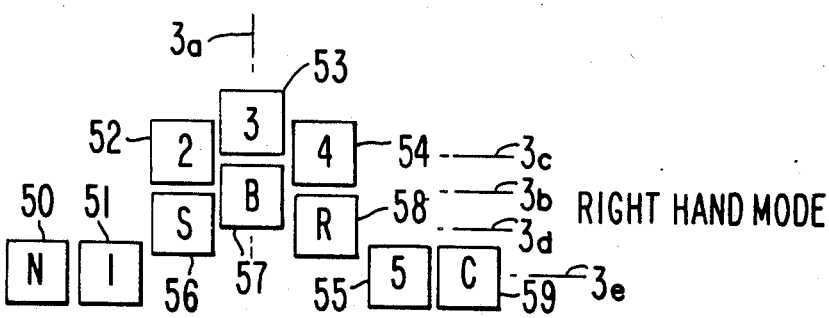
7 Claims, 6 Drawing Sheets