US009636600B2

(12) **United States Patent**
Rudisill et al.

(10) **Patent No.: US 9,636,600 B2**
(45) **Date of Patent: May 2, 2017**

(54) **TILE CONSTRUCTION SET USING PLASTIC MAGNETS**

(71) Applicants: **Charles A. Rudisill**, Apex, NC (US); **Daniel John Whittle**, Bellingham, WA (US)

(72) Inventors: **Charles A. Rudisill**, Apex, NC (US); **Daniel John Whittle**, Bellingham, WA (US)

(73) Assignee: **APEX TECHNOLOGIES, INC.**, Apex, NC (US)

(*) Notice: Subject to any disclaimer, the term of this patent is extended or adjusted under 35 U.S.C. 154(b) by 1085 days.

(21) Appl. No.: **13/766,776**

(22) Filed: **Feb. 14, 2013**

(65) **Prior Publication Data**

US 2014/0227934 A1 Aug. 14, 2014

(51) **Int. Cl.**
A63H 33/04 (2006.01)
A63H 33/06 (2006.01)

(52) **U.S. Cl.**
CPC ***A63H 33/046*** (2013.01)

(58) **Field of Classification Search**
CPC A63H 33/046; A63H 33/26; H01F 7/02–7/0231; H01F 7/0252–7/0268
See application file for complete search history.

(56) **References Cited**

U.S. PATENT DOCUMENTS

2,872,754 A 2/1959 Cronberger
3,254,440 A 6/1966 Duggar
3,998,004 A 12/1976 Ehrlich
5,021,021 A 6/1991 Ballard
5,411,262 A 5/1995 Smith
5,942,961 A * 8/1999 Srail H01F 7/0215 335/284
5,994,990 A * 11/1999 Ogikubo G09B 9/14 335/285
6,017,220 A 1/2000 Snelson
6,024,626 A 2/2000 Mendelsohn
6,431,936 B1 8/2002 Kiribuchi
6,969,294 B2 11/2005 Vicentelli
(Continued)

FOREIGN PATENT DOCUMENTS

DE 3929190 A1 1/1990
DE 9304198 U1 10/1993
(Continued)

OTHER PUBLICATIONS

Magna-Tiles FAQ downloaded from www.magnatiles.com/FAQ.
(Continued)

Primary Examiner — Aarti B Berdichevsky
Assistant Examiner — Urszula M Cegielnik
(74) *Attorney, Agent, or Firm* — Patent Leverage LLC; Daniel J. Whittle

(57) **ABSTRACT**

A magnetic tile construction set is disclosed that may be used to construct extended 3-dimensional structures. In one embodiment, plastic magnets are attached to multiple edges of a lightweight core. The magnets have a width and length comparable to the thickness of the core and a length that is an order of magnitude longer than the thickness of the core. Tiles may be attached to one another at the tile edges through magnetic forces that do not vary by more than a factor of two over the range of angles from 45 degrees to 180 degrees.
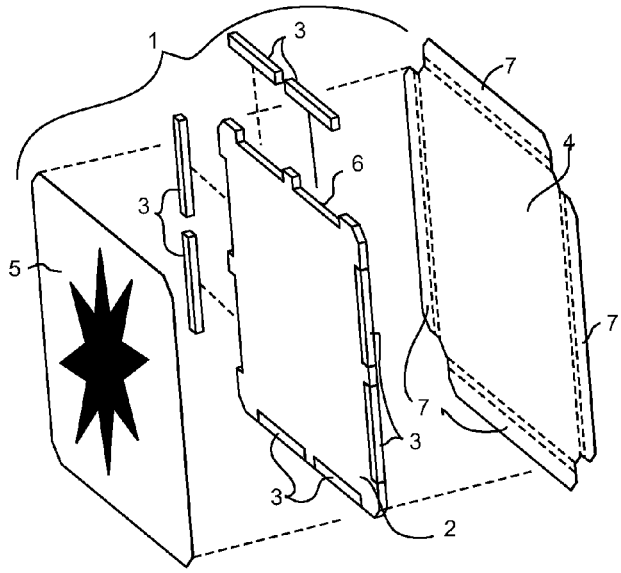
16 Claims, 13 Drawing Sheets