US009636500B2

(12) **United States Patent**
Swerdlow et al.

(10) **Patent No.: US 9,636,500 B2**
(45) **Date of Patent: May 2, 2017**

(54) **ACTIVE SURVEILLANCE OF IMPLANTED MEDICAL LEADS FOR LEAD INTEGRITY**

(71) Applicant: **Lambda Nu Technology LLC**, Orono, MN (US)

(72) Inventors: **Charles D. Swerdlow**, Los Angeles, CA (US); **Mark W. Kroll**, Crystal Bay, MN (US)

(73) Assignee: **Lambda Nu Technology LLC**, Orono, MN (US)

(*) Notice: Subject to any disclaimer, the term of this patent is extended or adjusted under 35 U.S.C. 154(b) by 36 days.

(21) Appl. No.: **14/224,335**

(22) Filed: **Mar. 25, 2014**

(65) **Prior Publication Data**

US 2015/0273225 A1 Oct. 1, 2015

(51) **Int. Cl.**

A61N 1/39	(2006.01)
A61N 1/05	(2006.01)
A61N 1/08	(2006.01)

(52) **U.S. Cl.**

CPC ***A61N 1/0563*** (2013.01); ***A61N 1/3937*** (2013.01); *A61N 2001/083* (2013.01)

(58) **Field of Classification Search**

CPC A61N 1/3937; A61N 1/371; A61N 1/3962
See application file for complete search history.

(56) **References Cited**

U.S. PATENT DOCUMENTS

3,599,055 A		8/1971	Bloom	
4,766,549 A		8/1988	Schweitzer, III et al.	
5,003,975 A		4/1991	Hafelfinger et al.	
5,231,987 A		8/1993	Robson	
5,243,980 A		9/1993	Mehra	
5,361,776 A		11/1994	Samuelson et al.	
5,405,363 A		4/1995	Kroll et al.	
5,453,698 A	*	9/1995	Williams	A61N 1/3706 324/537
5,557,210 A	*	9/1996	Cappa	A61N 1/05 324/538
5,741,311 A		4/1998	McVenes et al.	
5,755,742 A		5/1998	Schuelke et al.	

(Continued)

FOREIGN PATENT DOCUMENTS

EP	0288630 B1	11/1988
EP	2032027 B1	10/2011

OTHER PUBLICATIONS

"Agilent Impedance Measurement Handbook a Guide to Measurement Technology and Techniques 4th Edition," Agilent Technologies, Inc., Jun. 17, 2009, 140 pages.

(Continued)

Primary Examiner — Catherine Voorhees
(74) *Attorney, Agent, or Firm* — Patterson Thuente Pedersen, P.A.

(57) **ABSTRACT**

Active surveillance of potential lead anomalies in implanted medical leads utilizes test signal(s) delivered through an output current pathway and induced signals monitored via an independent monitor current pathway to detect for any reactions to the test signals in the induced signals. Various specific responses can be initiated if a potential insulation breach or anomaly in the implanted medical lead is identified due to detection of a "positive" test result in the induced signals on the monitor current pathway in reaction to a test signal applied to the output current pathway.
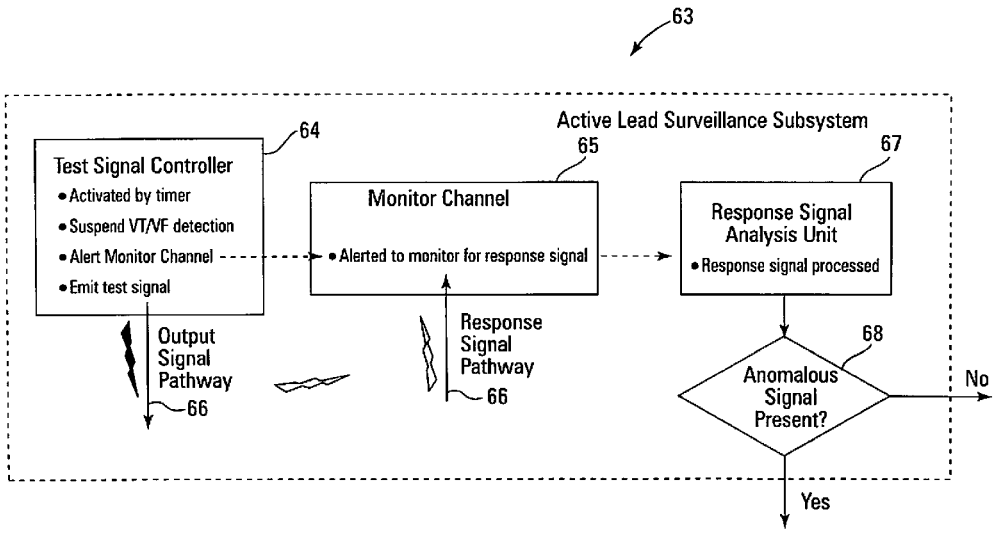
2 Claims, 12 Drawing Sheets