US00D433300S

United States Patent [19]

Buck

[11] Patent Number: Des. 433,300

[45] Date of Patent: ** Nov. 7, 2000

[54] **CIRCULAR SAW**

[75] Inventor: **John E. Buck**, Cockeysville, Md.

[73] Assignee: **Black & Decker Inc.**, Newark, Del.

[**] Term: **14 Years**

[21] Appl. No.: **29/109,360**

[22] Filed: **Aug. 13, 1999**

[51] **LOC (7) Cl.** **08-03**

[52] **U.S. Cl.** **D8/66**; D8/67

[58] **Field of Search** ..... D8/61, 64, 65, D8/66, 67, 69, 70; 30/388, 376, 389, 390, 391; 83/574, 663, 666, 863, 701, 523, 544, 545; 310/40 R, 500

[56] **References Cited**

U.S. PATENT DOCUMENTS

D. 329,363 9/1992 Sasaki et al. D8/66
D. 378,488 3/1997 Ito et al. D8/66
4,516,324 5/1985 Heininger, Jr. et al. 30/377
5,737,843 4/1998 Fringer et al. 30/391
5,794,351 8/1998 Campbell et al. 30/390

Primary Examiner—Martie K. Holtje
Attorney, Agent, or Firm—Charles E. Yocum; John D. Del Ponti; Bruce S. Shapiro

[57] **CLAIM**

The ornamental design for a circular saw, as shown and described.

DESCRIPTION

FIG. **1** is a front prspective view of a circular saw showing my new design.
FIG. **2** is a front elevational view thereof.
FIG. **3** is a rear elevational view thereof.
FIG. **4** is a right side elevational view thereof.
FIG. **5** is a left side elevational view thereof.
FIG. **6** is a top plan view thereof; and,
FIG. **7** is a bottom plan view thereof.
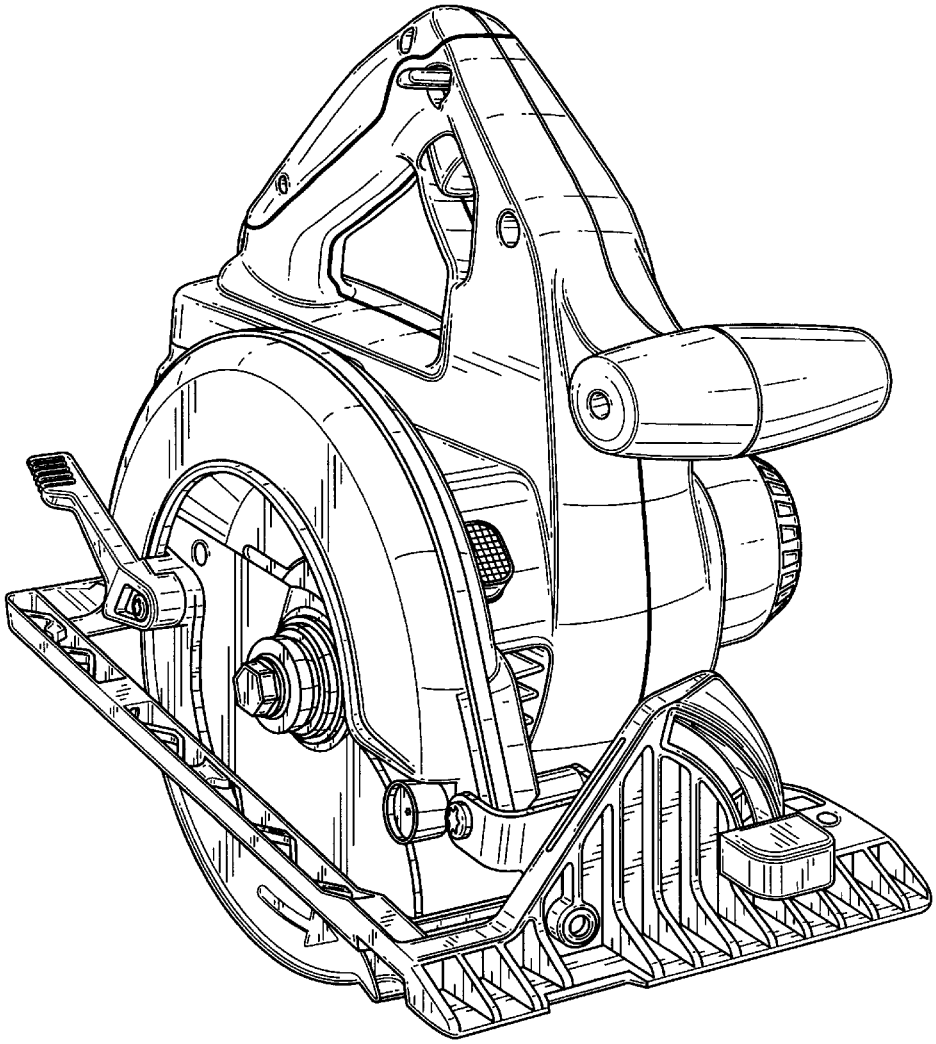
1 Claim, 7 Drawing Sheets