SEWAGE OPEN FLOW METER

Filed Nov. 1, 1957 4 Sheets-Sheet 2

Fig. 3

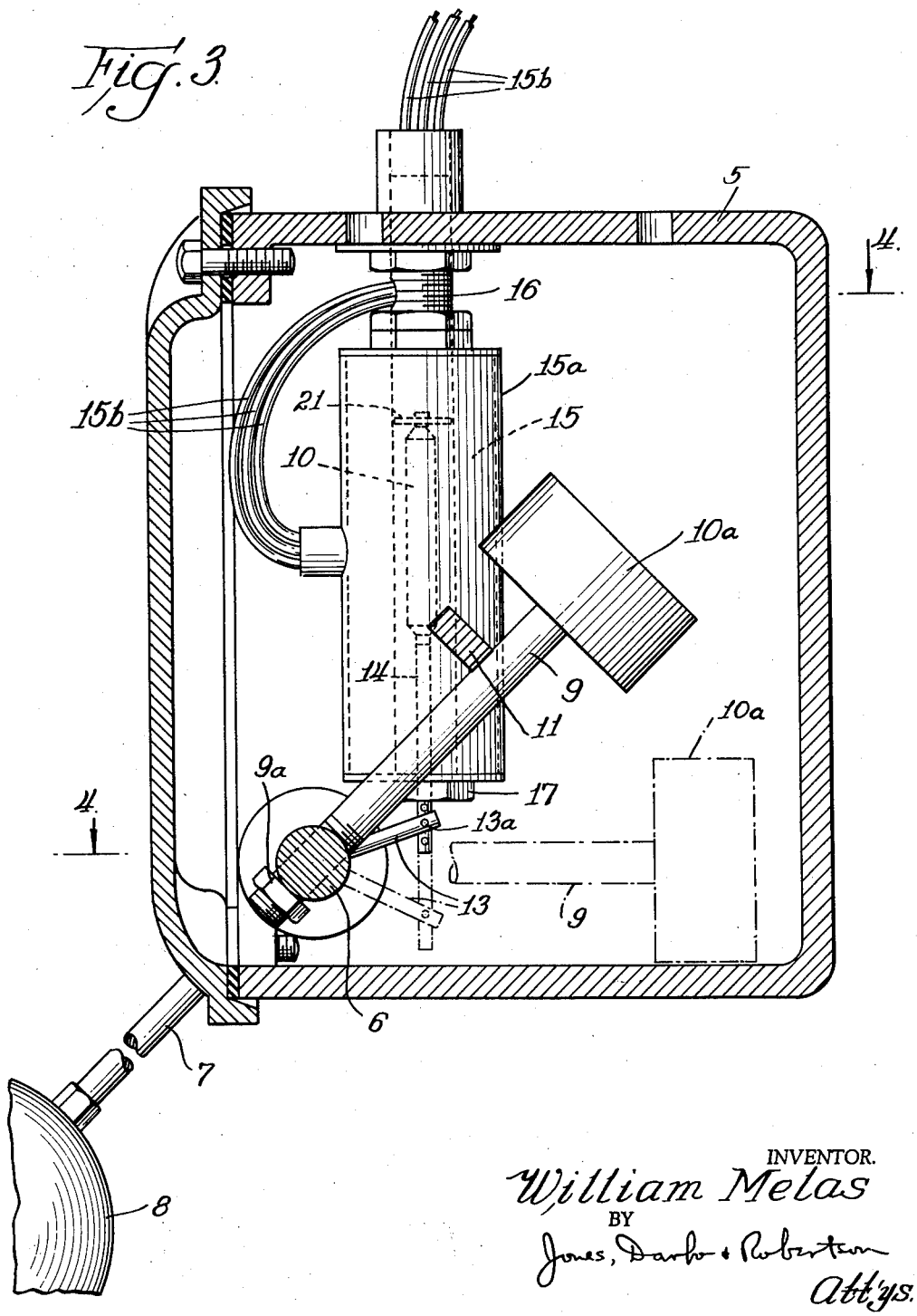

INVENTOR.
William Melas
BY
Jones, Darby & Robertson
Att'ys.