R. B. HIBBARD, D. J. WATROUS, AND J. G. BASSETTE.

DRYING APPARATUS.

APPLICATION FILED FEB. 18, 1921.

1,423,800.

Patented July 25, 1922.

3 SHEETS—SHEET 1.

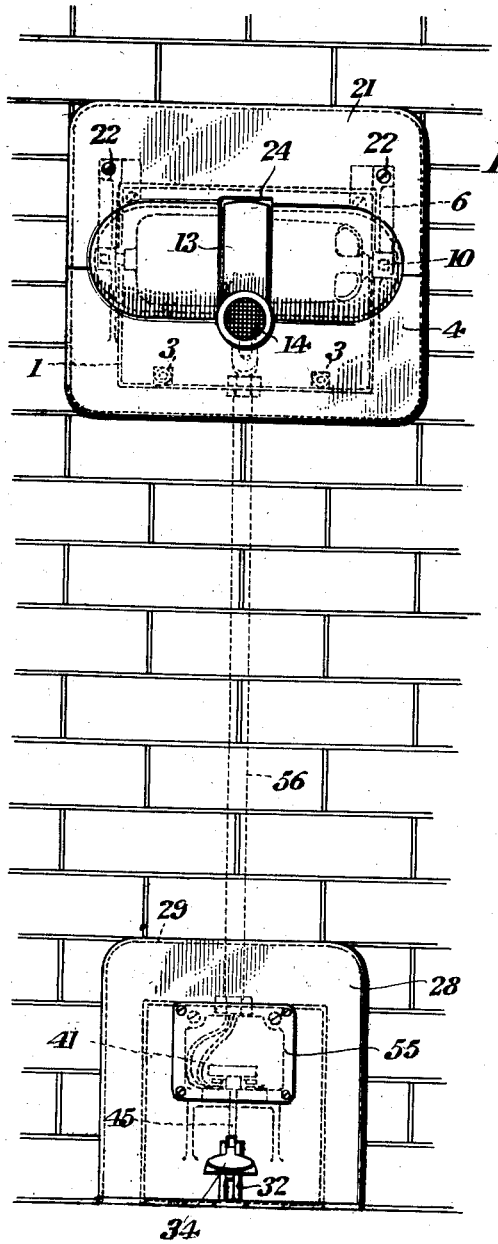

Fig. 1.

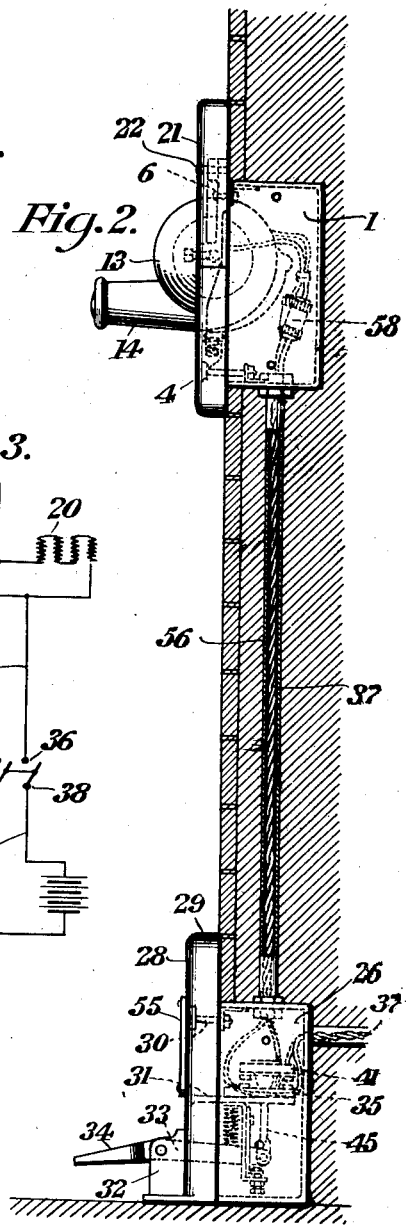

Fig. 2.

Fig. 3.

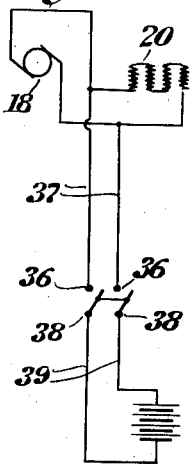

Inventors
Denton J. Watrous,
Rhuel B. Hibbard &
John G. Bassette
Davis & Davis
their Attorneys