US009411100B2

(12) **United States Patent**
Fontaine et al.

(10) **Patent No.: US 9,411,100 B2**
(45) **Date of Patent: Aug. 9, 2016**

(54) **PHOTONIC LANTERN SPATIAL MULTIPLEXERS WITH MODE SELECTIVITY**

(71) Applicant: **Alcatel-Lucent USA Inc.**, Murray Hill, NJ (US)

(72) Inventors: **Nicolas K. Fontaine**, Aberdeen, NJ (US); **Roland Ryf**, Keyport, NJ (US)

(73) Assignee: **Alcatel Lucent**, Boulogne-Billancourt (FR)

(*) Notice: Subject to any disclaimer, the term of this patent is extended or adjusted under 35 U.S.C. 154(b) by 24 days.

(21) Appl. No.: **14/033,033**

(22) Filed: **Sep. 20, 2013**

(65) **Prior Publication Data**

US 2015/0086157 A1 Mar. 26, 2015

(51) **Int. Cl.**

G02B 6/26	(2006.01)
G02B 6/14	(2006.01)
H04J 14/04	(2006.01)
G02B 6/02	(2006.01)
G02B 6/028	(2006.01)
G02B 6/28	(2006.01)

(52) **U.S. Cl.**

CPC . ***G02B 6/14*** (2013.01); ***H04J 14/04*** (2013.01); *G02B 6/02042* (2013.01); *G02B 6/0288* (2013.01); *G02B 6/2821* (2013.01)

(58) **Field of Classification Search**

None

See application file for complete search history.

(56) **References Cited**

U.S. PATENT DOCUMENTS

3,823,996	A *	7/1974	Kompfner et al.	385/126
5,949,931	A *	9/1999	Kitamura	385/28
6,611,648	B2 *	8/2003	Kumar et al.	385/126
2003/0053788	A1 *	3/2003	Lee et al.	385/140
2005/0111848	A1 *	5/2005	Grubb et al.	398/147
2011/0243490	A1 *	10/2011	Ryf	385/1
2012/0121220	A1 *	5/2012	Krummrich	385/28
2012/0163801	A1 *	6/2012	Takenaga et al.	398/16
2012/0200854	A1 *	8/2012	Bland-Hawthorn	356/328
2012/0224863	A1 *	9/2012	Winzer et al.	398/158
2013/0077916	A1 *	3/2013	Mahlab	385/20
2013/0230319	A1 *	9/2013	Essiambre et al.	398/44
2014/0079353	A1 *	3/2014	Fontaine et al.	385/14
2014/0153922	A1 *	6/2014	Ryf et al.	398/44
2014/0286648	A1 *	9/2014	Buelow	398/143
2015/0043910	A1 *	2/2015	Koebele	H04J 14/04 398/44
2015/0085351	A1 *	3/2015	Fontaine	H01S 3/094065 359/341.3
2016/0085024	A1 *	3/2016	Fontaine	G02B 6/04 398/65

FOREIGN PATENT DOCUMENTS

EP	2372420	A1 *	10/2011	G02B 6/28

OTHER PUBLICATIONS

D. Noordegraaf et al. Efficient multi-mode to single-mode coupling in a photonic lantern. Optics Express, 17:3:1988-1994, Feb. 2, 2009.*

* cited by examiner

Primary Examiner — Mike Stahl

(74) *Attorney, Agent, or Firm* — Loza & Loza, LLP

(57) **ABSTRACT**

A photonic lantern spatial multiplexer that provides mode selectivity includes a multimode optical waveguide and a plurality of single mode optical waveguides. The single mode cores of the single mode optical waveguides merge with the multimode core of the multimode optical waveguide. At least two of the single mode cores have different respective single mode effective refractive indexes.
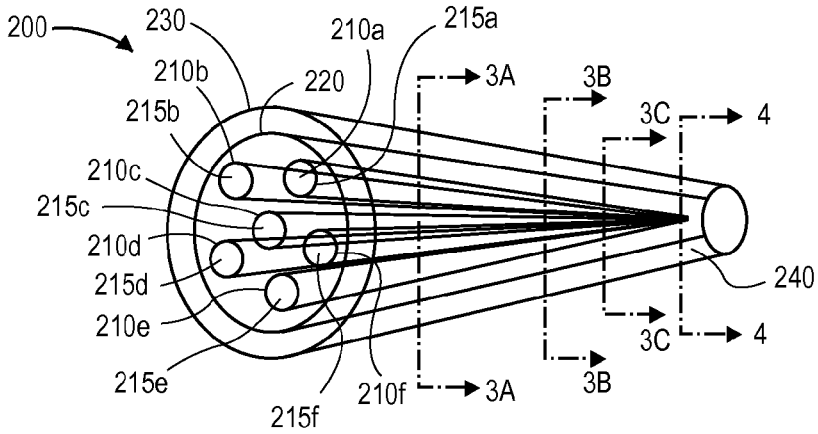
20 Claims, 4 Drawing Sheets