US009410400B2

(12) **United States Patent**
Hallundbæk

(10) **Patent No.: US 9,410,400 B2**
(45) **Date of Patent: Aug. 9, 2016**

(54) **DOWNHOLE COMPLETION**

(75) Inventor: **Jørgen Hallundbæk**, Græsted (DK)

(73) Assignee: **WELLTEC A/S**, Allerød (DK)

(*) Notice: Subject to any disclaimer, the term of this patent is extended or adjusted under 35 U.S.C. 154(b) by 430 days.

(21) Appl. No.: **13/994,908**

(22) PCT Filed: **Dec. 16, 2011**

(86) PCT No.: **PCT/EP2011/073101**

§ 371 (c)(1),
(2), (4) Date: **Jun. 17, 2013**

(87) PCT Pub. No.: **WO2012/080487**

PCT Pub. Date: **Jun. 21, 2012**

(65) **Prior Publication Data**

US 2013/0264063 A1 Oct. 10, 2013

(30) **Foreign Application Priority Data**

Dec. 17, 2010 (EP) 10195577

(51) **Int. Cl.**
E21B 34/14 (2006.01)
E21B 21/10 (2006.01)
E21B 34/00 (2006.01)

(52) **U.S. Cl.**
CPC ***E21B 34/14*** (2013.01); ***E21B 21/103*** (2013.01); *E21B 2034/007* (2013.01)

(58) **Field of Classification Search**
CPC E21B 34/14; E21B 2034/007
USPC 166/332.1, 334.4; 251/344
See application file for complete search history.

(56) **References Cited**

U.S. PATENT DOCUMENTS

3,907,046	A *	9/1975	Gaylord	E21B 34/14 175/235
4,066,128	A	1/1978	Davis et al.	
4,310,050	A	1/1982	Bourgoyne	
4,427,070	A	1/1984	O'Brien	
5,263,683	A	11/1993	Wong	
2008/0000697	A1	1/2008	Rytlewski	
2008/0156496	A1	7/2008	East	
2009/0044944	A1	2/2009	Murray et al.	
2011/0259595	A1	10/2011	Nguy et al.	
2011/0284240	A1 *	11/2011	Chen	E21B 23/00 166/373
2013/0168099	A1 *	7/2013	Themig	E21B 34/103 166/308.1

FOREIGN PATENT DOCUMENTS

CN	201007196 Y	1/2008
WO	WO 2009/029437 A1	3/2009
WO	WO 2010/089728	8/2010
WO	WO 2012/037645 A1	3/2012

OTHER PUBLICATIONS

International Search Report for PCT/EP2011/073101 mailed Feb. 10, 2012.
Examination Report issued in corresponding Australian Patent Application No. 2011343205 dated Sep. 8, 2014.

* cited by examiner

Primary Examiner — Jennifer H Gay
Assistant Examiner — George Gray
(74) *Attorney, Agent, or Firm* — Nixon & Vanderhye P.C.

(57) **ABSTRACT**

A downhole completion includes a production casing and a sliding sleeve assembly connected as part of the production casing. The completion includes a tubular part and a tubular sleeve.
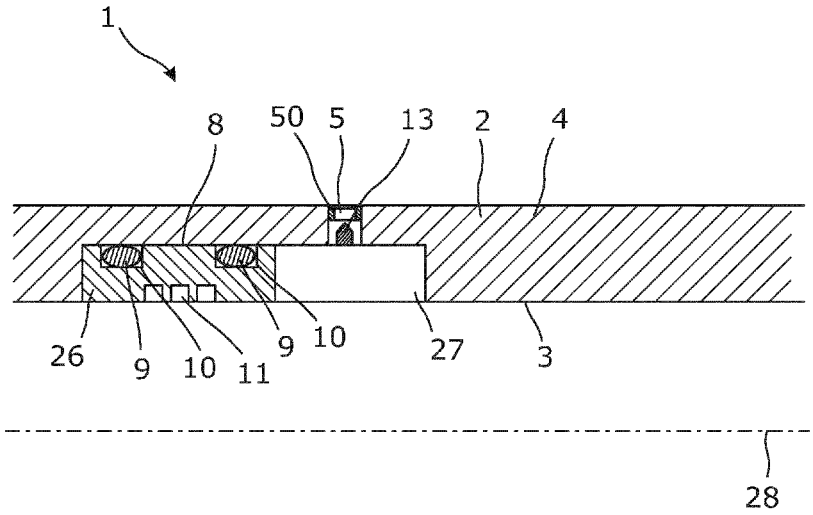
9 Claims, 4 Drawing Sheets