US009409100B2

(12) **United States Patent**
**Hillery**

(10) **Patent No.: US 9,409,100 B2**
(45) **Date of Patent: Aug. 9, 2016**

(54) **CONFETTI POPPER**

(71) Applicant: **Jonathan Paul Hillery**, Hampton, NH (US)

(72) Inventor: **Jonathan Paul Hillery**, Hampton, NH (US)

( * ) Notice: Subject to any disclaimer, the term of this patent is extended or adjusted under 35 U.S.C. 154(b) by 19 days.

(21) Appl. No.: **14/303,976**

(22) Filed: **Jun. 13, 2014**

(65) **Prior Publication Data**

US 2015/0360140 A1 Dec. 17, 2015

(51) **Int. Cl.**
***A63H 37/00*** (2006.01)

(52) **U.S. Cl.**
CPC ..... ***A63H 37/00*** (2013.01)

(58) **Field of Classification Search**
CPC ..... A63H 27/10; A63H 37/00
See application file for complete search history.

(56) **References Cited**

U.S. PATENT DOCUMENTS

4,586,456 A * 5/1986 Forward ..... B63C 9/20 116/210
4,787,160 A * 11/1988 Balsamo ..... B65D 73/0092 206/469
4,920,674 A * 5/1990 Shaeffer ..... A63H 27/10 116/210
4,932,915 A * 6/1990 Boris ..... A63H 37/00 446/220
5,083,771 A * 1/1992 Tyner ..... A63H 27/10 116/DIG. 9
5,306,194 A * 4/1994 Epstein ..... A63H 27/10 446/220
5,338,242 A * 8/1994 Cheng ..... A63H 37/00 446/183
5,852,889 A * 12/1998 Rinaldi ..... B42D 15/045 40/124.06
6,158,588 A * 12/2000 Conti ..... B65D 5/4291 116/307
6,299,502 B1 10/2001 Cheng
6,447,364 B1 9/2002 Song
6,450,160 B1 9/2002 Fu et al.
6,478,651 B1 * 11/2002 Weir ..... G09F 19/00 40/212
7,350,477 B1 4/2008 Tilford et al.
8,469,768 B1 6/2013 Smith
8,858,350 B2 * 10/2014 Christoffel ..... A63H 27/005 446/220
2001/0053654 A1 12/2001 Watkins
2006/0199469 A1 * 9/2006 Du ..... A63H 37/00 446/475
2007/0249259 A1 10/2007 Pham
2010/0267309 A1 * 10/2010 Hyland ..... A63F 9/0079 446/188
2013/0263481 A1 * 10/2013 Nwosu ..... B42D 15/02 40/124.06
2014/0370776 A1 * 12/2014 Boren ..... A63H 27/06 446/56

* cited by examiner

*Primary Examiner* — Michael Dennis
*Assistant Examiner* — Urszula M Cegielnik
(74) *Attorney, Agent, or Firm* — Lambert & Associates; Gary E. Lambert; David J. Connaughton, Jr.

(57) **ABSTRACT**

A confetti popper device is provided. The confetti popper has a quantity of confetti stored within a body. A balloon or similar expandable membrane within the body may be inflated until a pressure within the interior against a cover reaches a certain pressure. Upon reaching this pressure, the cover of the body may release, causing the confetti to be ejected ("popped") from the body.
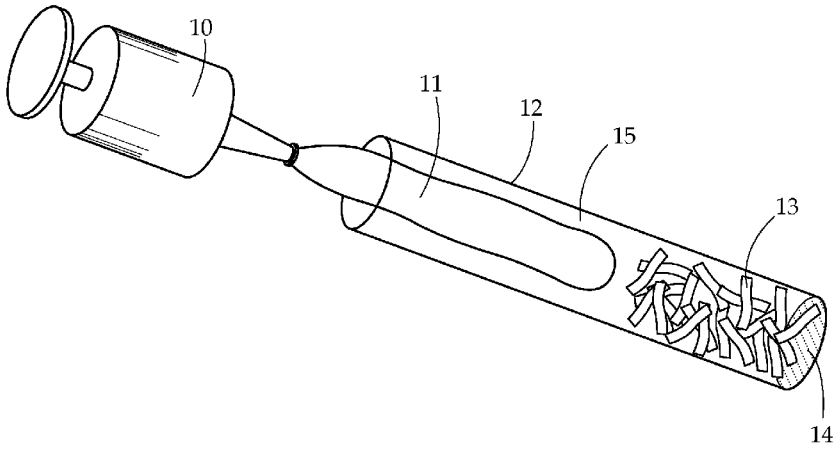
**16 Claims, 2 Drawing Sheets**