US006003700A

United States Patent [19]

Julian et al.

[11] **Patent Number: 6,003,700**

[45] **Date of Patent: Dec. 21, 1999**

[54] **SAFETY CLOSURE AND CONTAINER**

[75] Inventors: **Randall K. Julian**, Newburgh; **C. Edward Luker**, Evansville, both of Ind.

[73] Assignee: **Rexam Plastics Inc.**, Evansville, Ind.

[21] Appl. No.: **09/053,331**

[22] Filed: **Apr. 1, 1998**

[51] **Int. Cl.**[6] **B65D 55/02**

[52] **U.S. Cl.** **215/216**; 215/217; 220/281

[58] **Field of Search** 215/213, 214, 215/216–221, 301, 295, 329, 316; 220/281

[56] **References Cited**

U.S. PATENT DOCUMENTS

3,115,979	12/1963	Barvin .	
3,339,770	9/1967	Weigand .	
3,435,975	4/1969	Weigand .	
3,472,411	10/1969	Turner .	
3,484,016	12/1969	Turner .	
3,667,636	6/1972	Landen .	
3,841,514	10/1974	Montgomery et al. .	
3,917,097	11/1975	Uhlig .	
3,944,101	3/1976	Landen et al. .	
3,949,893	4/1976	Uhlig	215/216
3,951,289	4/1976	Landen .	
3,984,021	10/1976	Uhlig .	
4,117,945	10/1978	Mumford .	
4,138,028	2/1979	Price et al. .	
4,154,354	5/1979	Ryder	215/216
4,180,178	12/1979	Turner	220/281
4,187,953	2/1980	Turner	220/281 X
4,213,534	7/1980	Montgomery .	
4,351,442	9/1982	Summers .	
4,444,327	4/1984	Hedgewick .	
4,500,006	2/1985	Lafortune et al.	220/281 X
4,535,905	8/1985	Sandhaus	215/218
4,620,640	11/1986	Swartzbaugh .	
4,842,135	6/1989	Borst et al.	220/281 X
4,913,299	4/1990	Petro .	
5,147,052	9/1992	Minette .	
5,147,059	9/1992	Olsen et al.	220/281
5,238,130	8/1993	Marques et al. .	
5,449,077	9/1995	Seidler .	
5,836,467	11/1998	Montgomery	215/216

FOREIGN PATENT DOCUMENTS

2339539	8/1977	France .

Primary Examiner—Stephen P. Garbe
Assistant Examiner—Robin A. Hylton
Attorney, Agent, or Firm—Middleton & Reutlinger; John F. Salazar; Charles G. Lamb

[57] **ABSTRACT**

A safety closure providing a top wall, an annular outer wall depending downwardly from an outer periphery of the top wall, an annular inner wall depending downwardly from an underside surface of the top wall, and, at least one locking lug integrally molded with the outer wall, whereby downward displacement of the top wall causes outward displacement of the at least one locking lug.
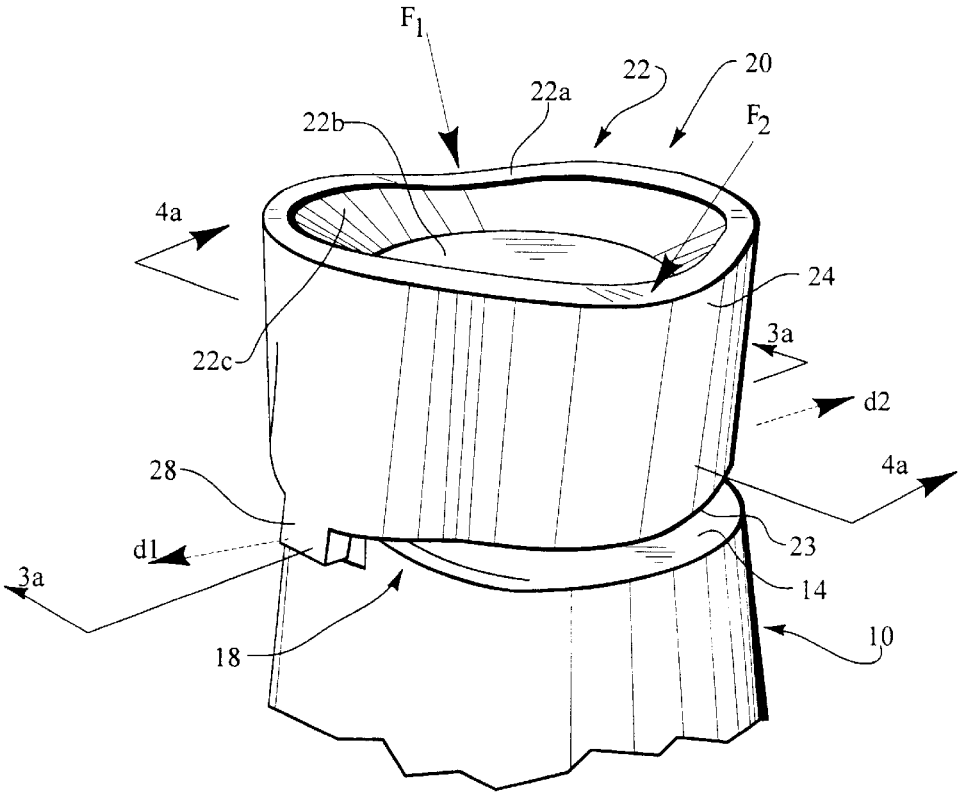
8 Claims, 8 Drawing Sheets