US009000000B2

(12) **United States Patent**
Carroll

(10) **Patent No.: US 9,000,000 B2**
(45) **Date of Patent: Apr. 7, 2015**

(54) **WINDSHIELD WASHER CONDITIONER**

(71) Applicant: **WiperFill Holdings, LLC**, Jupiter, FL (US)

(72) Inventor: **Matthew Carroll**, Jupiter, FL (US)

(73) Assignee: **WiperFill Holdings, LLC**, Jupiter, FL (US)

(*) Notice: Subject to any disclaimer, the term of this patent is extended or adjusted under 35 U.S.C. 154(b) by 163 days.

(21) Appl. No.: **13/797,259**

(22) Filed: **Mar. 12, 2013**

(65) **Prior Publication Data**

US 2013/0240419 A1 Sep. 19, 2013

Related U.S. Application Data

(60) Provisional application No. 61/610,275, filed on Mar. 13, 2012.

(51) **Int. Cl.**

B60S 1/48	(2006.01)
B60S 1/50	(2006.01)
C02F 1/42	(2006.01)
C02F 103/00	(2006.01)

(52) **U.S. Cl.**

CPC ***B60S 1/48*** (2013.01); ***B60S 1/50*** (2013.01); *C02F 1/42* (2013.01); *C02F 2307/00* (2013.01); *C02F 2103/001* (2013.01); *C02F 2303/24* (2013.01)

(58) **Field of Classification Search**

CPC B60S 1/48; B60S 1/50; C02F 1/42; C02F 2001/425; C02F 2001/427

USPC 15/250.01; 134/109; 222/187; 210/95, 210/171, 172.1, 198.1, 202, 232, 251, 266, 210/282, 289, 502.1

See application file for complete search history.

(56) **References Cited**

U.S. PATENT DOCUMENTS

2,701,897	A	2/1955	Leming	
2,703,127	A *	3/1955	Webb	383/41
2,770,017	A	11/1956	Oishei et al.	
3,738,575	A	6/1973	Somer	
5,261,254	A	11/1993	Cattane	
5,347,661	A *	9/1994	Fly et al.	4/225.1
5,669,986	A	9/1997	Buchanan, Jr. et al.	
6,024,803	A	2/2000	Buchanan, Jr. et al.	
6,089,620	A *	7/2000	Mota Lopez et al.	285/322
6,266,842	B1	7/2001	Muller	
2004/0112411	A1 *	6/2004	Boykin et al.	134/28

FOREIGN PATENT DOCUMENTS

DE	4101820	A1 *	7/1992	B60S 1/46
DE	4436023	A1 *	4/1995	B60S 1/48
DE	EP1053922		11/2000	
DE	20022285		7/2001	
DE	10138466		4/2003	
DE	102005055714		3/2007	

* cited by examiner

Primary Examiner — Matthew O Savage
(74) *Attorney, Agent, or Firm* — McHale & Slavin, P.A.

(57) **ABSTRACT**

A system and method of collecting and conditioning rainwater and other moisture, such as dew, from a windshield of a vehicle and utilizing the collected fluid to replenish the fluids in the windshield washer reservoir. A collection funnel is positioned on a vehicle in order to collect rainwater and other moisture. Rainwater and other fluids from the collection funnel are directed to a conditioning cartridge where the water is de-ionized and windshield washer fluid is added. The cartridges are designed to be single replaceable units. The mixed fluid from the mixing cartridge is directed to the pre-existing windshield washer reservoir.
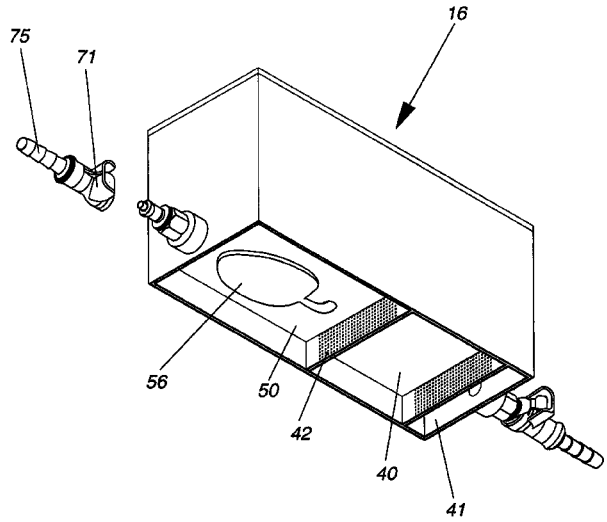
10 Claims, 8 Drawing Sheets